MFG226705

Reliable Modelling Techniques for Complex Part Design in Inventor

Paul Munford & Luke Mihelcic

Autodesk

Learning Objectives

- Learn how to take control of your parametric relationships
- Learn how to build complex parametric parts that are too robust to fail
- Learn how to document your models to make them easy to “read” and work with
- Take away a “best practice” workflow that can become your office standard

Description

Have you ever built a 3D parametric model with Inventor software that just EXPLODED?

In this class, we will learn how to build reliable, predictable, parametric part models with confidence.

We will learn a structured approach that can easily be documented as an office standard.

We will learn how to order our feature tree and how to make features adapt without making the model fragile.

Finally, we will learn how to document our design intent to make our models easy to “read” and work with.

Don't waste any more time fixing bad models. Start with great models—and make them better!

Supporting documents

Don’t forget to watch the presentation and download the dataset that comes with the handout.

[URLs TBC]

Paul Munford

Paul Munford is a laugher, dreamer, bon vivant, CAD geek and Technical Marketing Manager for Autodesk in the UK.

Paul 's background in manufacturing items for the construction industry gives him a foot in digital prototyping and a foot in Building Information Modeling (BIM).

Paul was a speaker at Autodesk University for the first time in 2012, and he says it's the most fun anyone can have with 250 other people in the room.

Luke Mihelcic

Luke has been involved with design, engineering and analysis since 1995.

His career started in telecommunications designing mobile production equipment for TV and radio. He has taught design and engineering at Pittsburgh Technical Institute and has spent over 10 years as an application engineer for an Autodesk reseller and Blue Ridge Numerics.

His various roles as educator, end-user and provider give him a unique perspective on identifying, understanding and helping solve design and engineering challenges.

As the Technical Marketing Manager for the core manufacturing solutions at Autodesk, he is responsible for the development, creation and implementation of relevant content and tools that help users understand and utilize the Autodesk Design and Manufacturing Portfolio.

Table of Contents

Advanced Part Modelling

Reliable Modelling Techniques for Complex Part Design in Inventor

Why is parametric modelling so hard? One minute you have a perfectly good model, looking fine, the next minute EXPLOSION!

I know that this has happened to you – it's happened to me too.

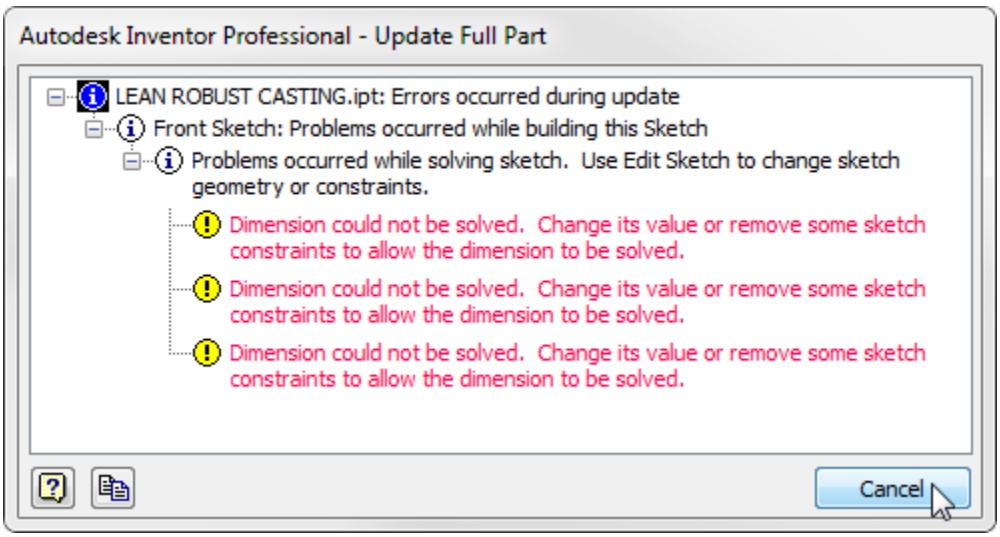

How to use Inventor properly?

When I'm teaching Inventor I often get asked:

'How do I use Inventor properly?'

Of course – there is no 'Right' way to use Autodesk Inventor. It's a tool just like any other. We can use it for lots of different tasks, and in lots of different ways – all of them correct.

So, how can we quantify a 'well modelled' part?

I've given this a lot of thought – and I can only come up with two criteria.

1. The geometry must be **correct** (that's a given).
2. The part must be **easy to update** (this is the tricky part).

The benefit of parametric modelling

Autodesk Inventor allows us to build parametric models. Models that can easily change by adjusting the value of a parameter.

This is awesome for building models that need to be adjusted in a predictable fashion (configurable designs). Or building families of components that are very similar (copy and paste, adjust a parameter, job done).

The problem with parametric modelling

The problem with parametric modelling, is that we must model in 4 dimensions.

We model in the usual three dimensions, and we must also consider *Time*, or the way our model might change over time.

This change over time is often referred to as '*Design Intent'*. Building a model that can change in a predictable fashion takes a little thought and some planning.

The problem with parametric modelling is…

- It's easy to unintentionally create relationships (Booby traps!).
- Editing a feature causes all subsequent features to regenerate.
- Part updates become unpredictable.
- Design intent is lost.
- Time is lost 'fixing' parts, or re-modelling from scratch.
- We would rather build our own parts, than re-use someone else's.

Reliable modelling technique

Reliable modelling technique takes effort up front. Back in the day, working productively in AutoCAD meant mashing the keyboard faster.

Working productively in Inventor is more like playing chess. It pays to sit back and think about what we're going to do before we start.

Reliable modelling requires a plan.

Reliable modelling gives us…

- **Editable models** – Design intent is captured.
- **Obvious models** – Design intent is documented.
- **Reusable models** – We would rather re-use than rebuild.

What makes a model complex?

If your model has only one solid body, and a handful of features, you don't have to worry about your colleagues figuring out how to change your model.

If you are creating a model of a part that isn't subject to change (for example a supplier's component), you don't need to worry about 'Design Intent'.

Building reliable models will take you *longer* in the short term. Building reliable models will save you time, only if you will be changing a part numerous times in its life time, or you can reuse a part in multiple designs.

Reliable modeling is a pre-requisite when using a top down modelling technique, or building configurable content such as iParts, iAssemblies or iLogic driven designs.

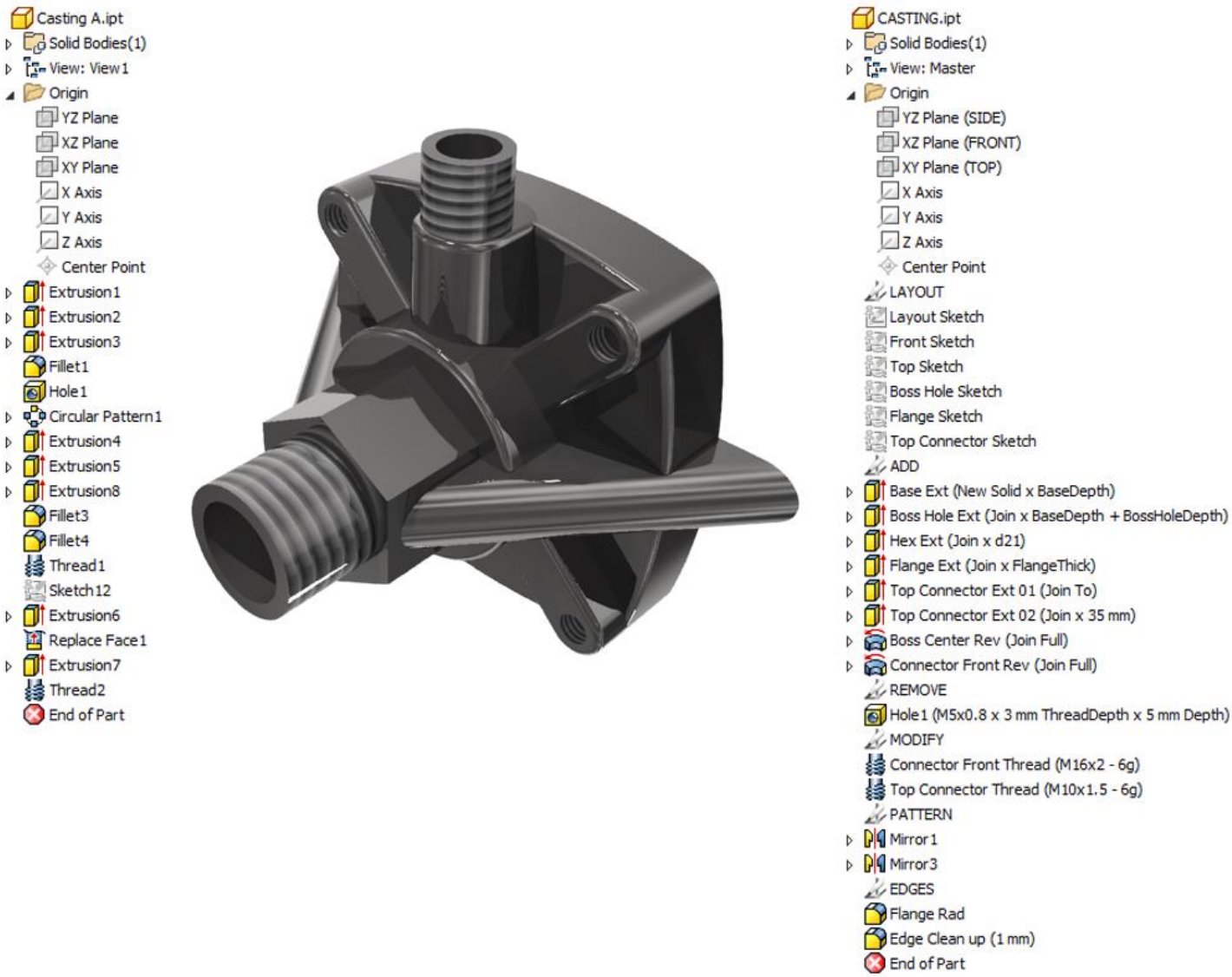

Encouraging good modelling behaviour

When I was a CAD manager, I found diagnosing unexpected bevor in models to be a time-consuming challenge.

One tool that I found helped me a great deal is the Inventor Design Checker.

Autodesk Inventor Design Check is a tool that can be downloaded from the Autodesk App store (it's free for subscription customers).

Design checker can be used to check for best practice in other's models, but it can also be used by novice modelers to give them dynamic feedback on the progress of their model.

You can find out more here:

Design Checker | Inventor | Autodesk App Store
http://apps.autodesk.com/INVNTOR/en/Detail/Index?id=9061247151473406095&appLang=en&os=Win32_64

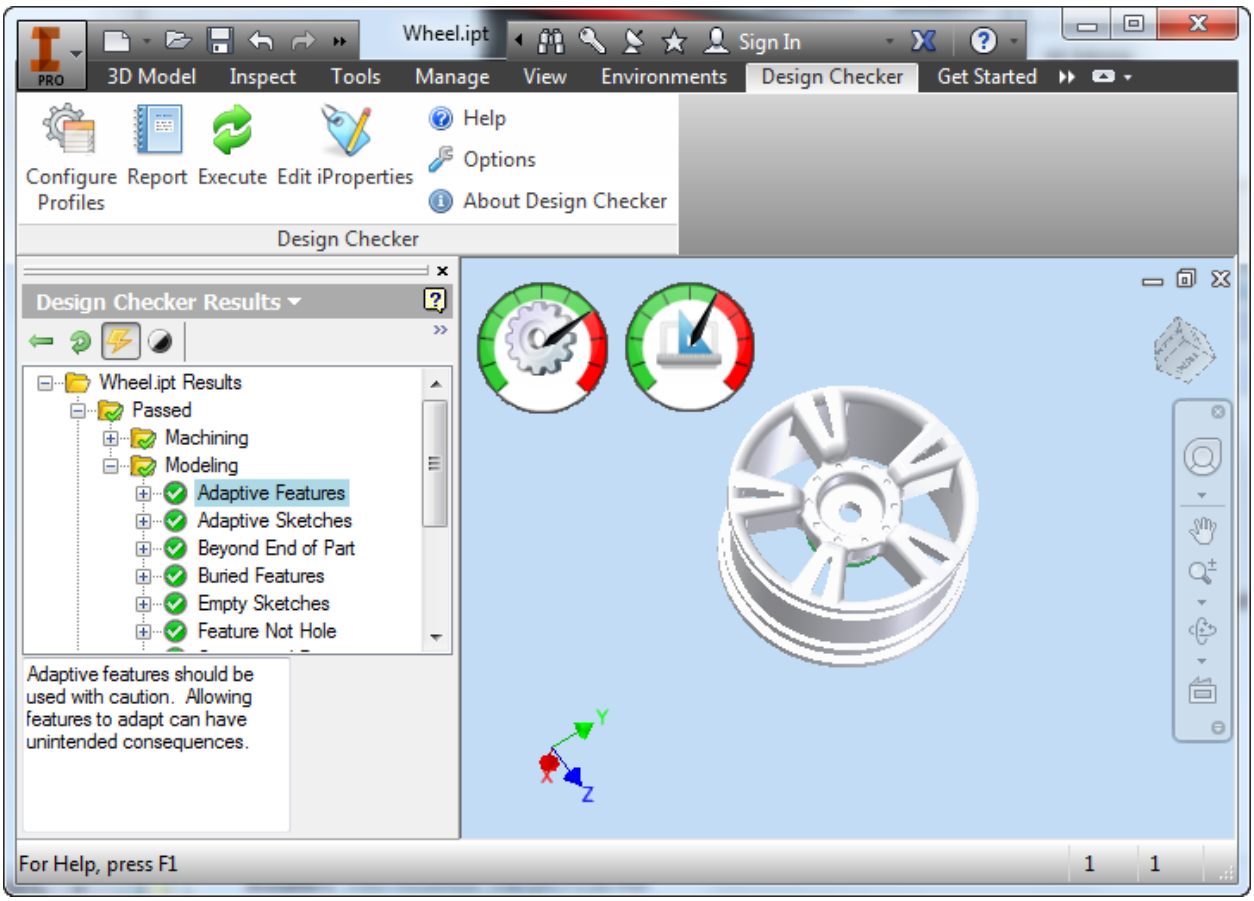

Relationships

The key to creating complex models in Autodesk Inventor is maintaining control of relationships.

If you don't understand the relationships you've built between parameters, sketches, features, bodies, parts constraints and assemblies – your model will *not* update in a predictable fashion.

The bad news is that Inventor won't manage this for you (it can't read your mind!).

The good news is that YOU have full control over this process.

Relationship rules

- No **unintended** Relationships
- Relationships are kept to a **minimum**
- All relationships are **planned** and **purposeful**
- All relationships are **obvious** and **easily understood**

The Model Browser and Feature History

The model browser in Inventor is also known as the 'Feature tree'. Each item in the tree represents a feature in our model, for example a Hole or a Fillet.

Features can be broken down into two groups. Sketched based features (Extrude, Revolve, Sweep Loft etc.) and 'in place' features, that is – features that don't need a sketch, but do need existing geometry to be based on (Fillet, Chamfer, Shell etc.).

The model browser is also known as the 'History' browser, because it shows the order that the features where created in.

Each feature in the tree can reference features further 'up' the tree (In the past). Features cannot reference other features 'down' the tree from them (in the future).

Features can be dragged into a different order within the feature tree, but they can't be dragged 'up' past a feature that they are referencing, or 'down' past a feature that is referencing them.

These relationships are also known as 'Dependencies'. Feature based modelling is a powerful tool, because we can use these dependent relationships to add intelligence to our model.

At the end of the model browser is the 'End of Part Marker (EOP). You can drag this up or down the tree to temporarily suppress features.

Design Intent

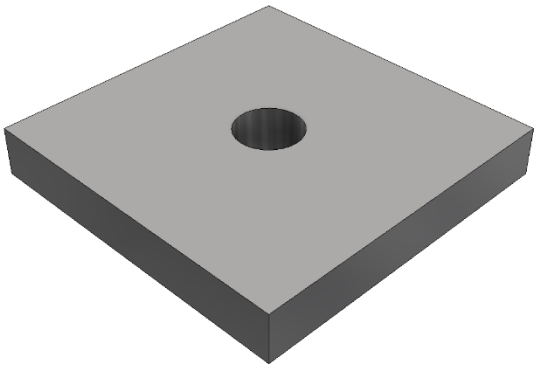

If I gave you a model of a 50mm by 50mm by 6mm steel plate, with an M10 clearance hole through the middle of the face, and asked you to change the width of that plate – what should happen to the hole?

Using feature-based modelling we can decide how our model will change, this is known as 'Design Intent'.

***Tip**: Use the Feature Section Filter tool (In the Quick access tool part, green symbol) to switch between selecting faces and edges, features and sketches. Hold down the SHIFT key and right click to bring the filter up at your cursor.*

In Feature selection mode you will be able to double click on a feature in the graphics window to edit it, rather than having to find it in the browser.

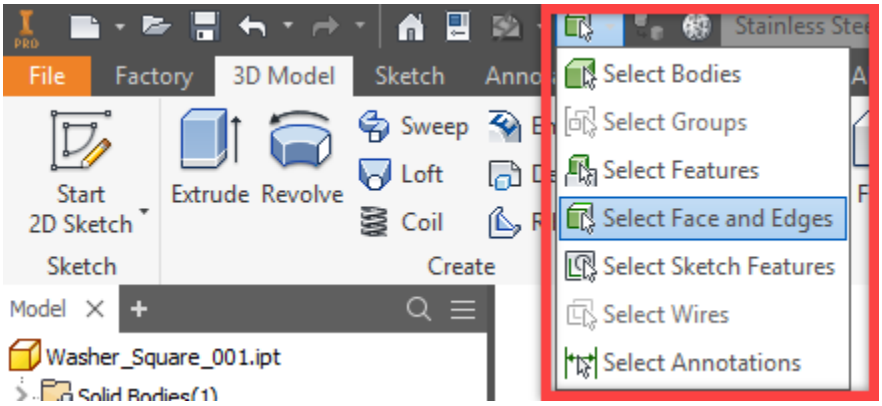

Diagnosing relationships

When you need to diagnose a model that you didn't build, try using the relationships manager to help.

Right click on any feature in the browser and choose 'Relationships'. The selected relationship is seen in the middle of the Relationships dialog. The feature will be highlighted in the browser and in the graphics window.

Features that are required by the selected feature are seen in the box above. Features that depend on the selected feature are seen in the Box below.

Traverse the related features by picking on the 'Make selected' (white arrow) button next to the feature you are interested in.

Edit the feature you are interested in by picking on the 'Edit feature' button next to it.

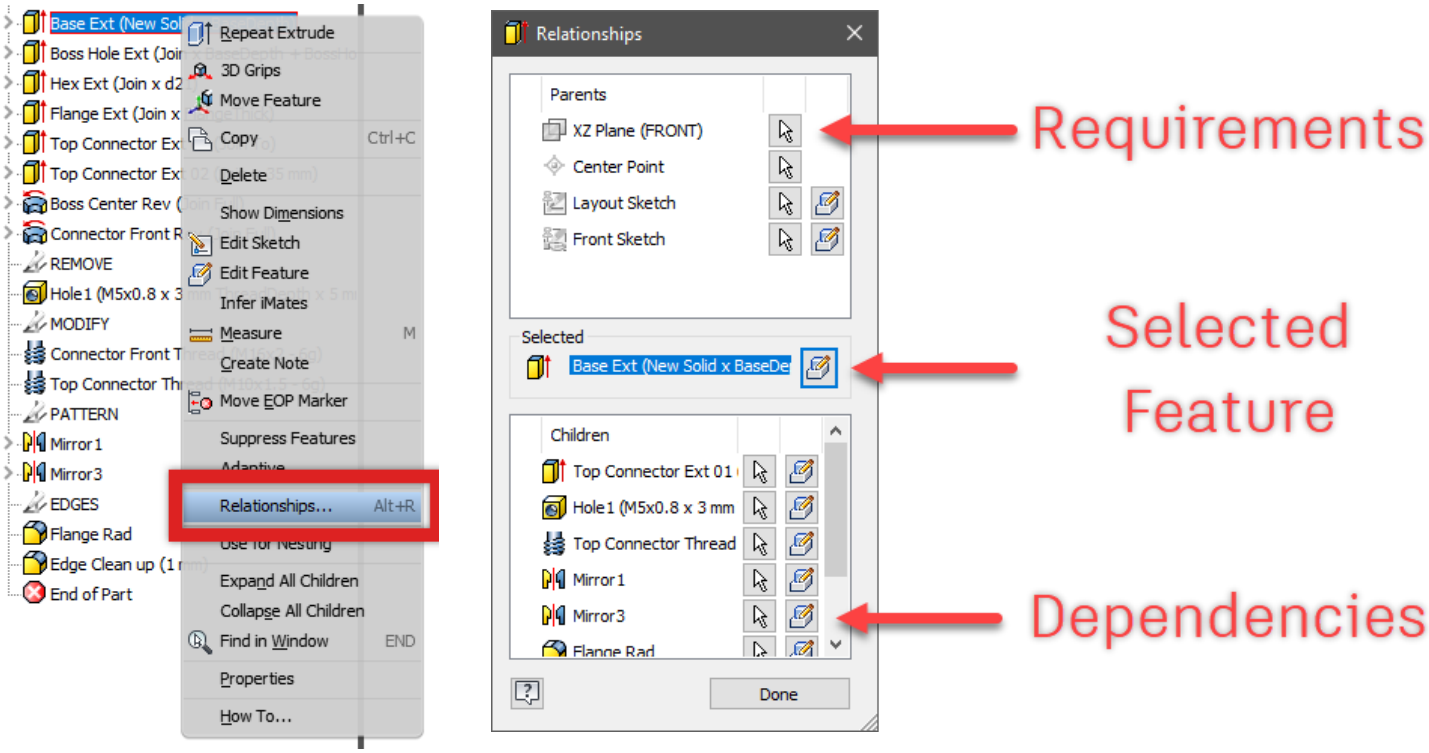

Fixing Faults in part models

When (When – not if!) you are editing a design and you get a failure, you'll need to know how to cope.

Understanding the modelling best practices in this handout will help you to understand where the faults in the model lie.

I also hope that this handout will not only help you fix the fault but also, make the model more robust in the long run.

Here are some tips for fixing failures.

Drill down for help

Inventor will warn you of impending doom with a pop-up warning. Click on the 'Plus' symbol to expand the nodes until you see red text. Click on this red text to highlight the problem in the graphics window.

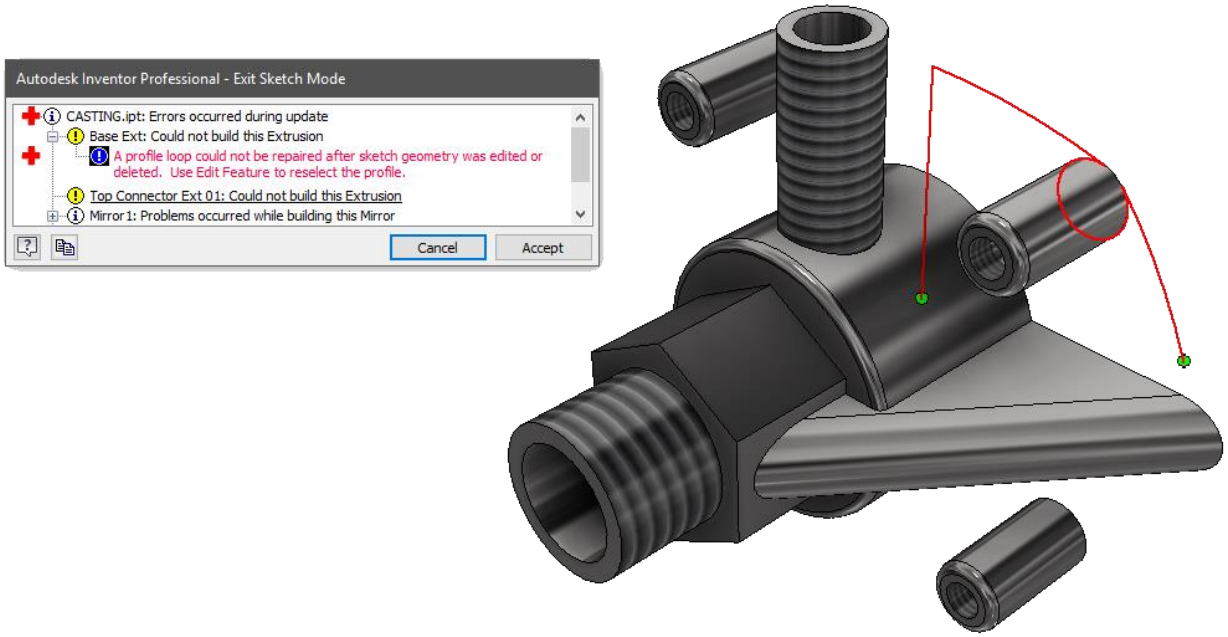

Roll up the End of Part Marker (EOP)

Faults often cascade. This can look devastating, but often – fixing the first fault will automatically repair faults in dependant features.

The trick is to supress all features below the first effected feature, by moving the EOP up. You can drag and drop the EOP, or right click on the effected feature and chose 'Move EOP Marker'.

Fixing the fault

If you know what the fault is – fix it!

If you don't know what the fault is, right click on the broken feature and choose 'recover' to start the design doctor, which will help you through the process.

Once you've fixed the fault, roll the EOP back down by a couple of features to check that they rebuild as expected. Keep rolling the EOP down a few features at a time, fixing problems as you go until the whole feature tree will rebuild.

Now. How would you have built this part differently?

Tip*: You may not always be able to go back and re-build every part in a robust manner, but there is always something to learn from inspecting other people's models.*

Sketched Vs Placed Features

You will notice that many tools are available in the sketch environment that are also available in the feature environment. Examples are Fillet, Chamfer, Mirror and pattern.

The advice here is to keep your sketches simple, use features whenever you can.

If in doubt – if the same tool is available in both the sketch environment and the feature environment – use the feature.

Why?

- **Diagnose failures.**
  If anything goes wrong, it is likely to be in a sketch. Keeping sketches simple makes faults much easier to diagnose. Sketch based Mirroring and Patterning in particular often cause problems and can be easily replaced with features.
- **Maintain flexibility**
  Features can be suppressed while you try alternatives.
- **Preserve design intent**
  It is much easier for downstream consumers of your model to understand your design intent when you use (for example) a Hole feature, rather than a sketched Circle.
- **Downstream functionality**
  Should your model be used downstream, for example for CNC programming, FEA or BIM, it's much easier to simplify the model by suppressing features that it is to remove sketched features.

Relationships, order of preference

Some relationships are more complicated for Inventor to work out than others. When you are planning your design, keep this in mind.

Create simple parametric relationships where you can, create complex feature to feature relationships only when you have too.

1. **Parametric Relationships**
   Inventor is a computer programme. Computers are really, really good at Math. It may come as no surprise that the simplest relationship for Inventor to manage is a mathematical one.

   Parameter1 Drives Sketch1 Geometry.

   - Can you express a relationship in your design as an equation?
   - Could you use iLogic to describe complex formulas?

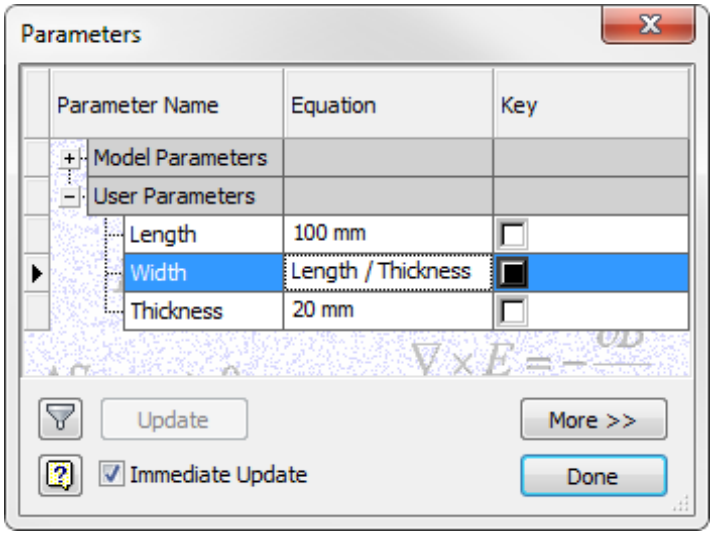

2. **Sketch to Sketch**

   If you can't express a relationship mathematically, and you need to express it geometrically, the safest way is to relate a sketch to another sketch.

   This is known as a 'Horizontal' relationship – both sketches are on the same level. We are minimizing the number of feature relationships Inventor must calculate, and therefore reducing the opportunity for error.

   Parameter1 Drives Sketch1 which drives Sketch2.

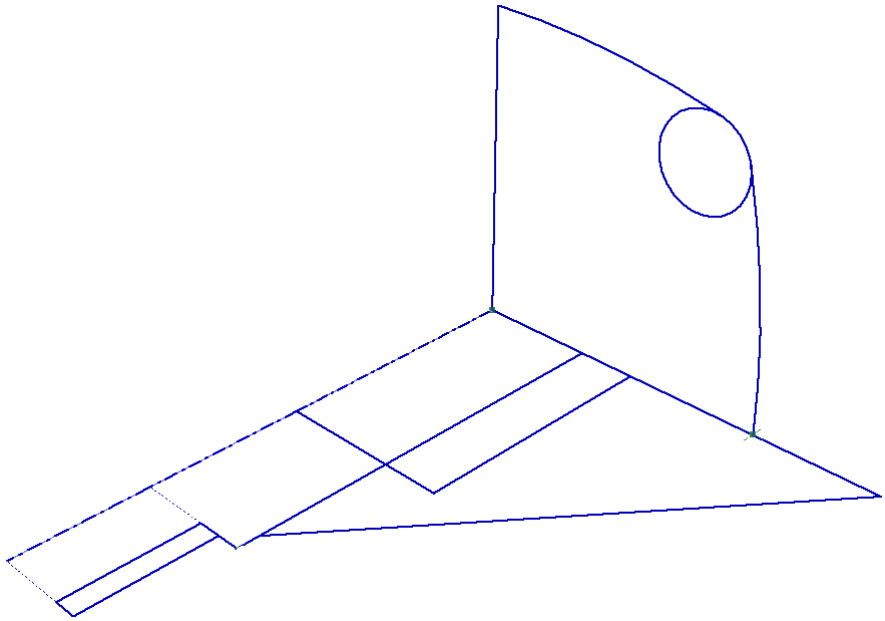

3. **Sketch to Feature**

creating a sketch on the face of an existing feature is a common workflow. It's not wrong to do this, but it's worth recognising what you just did.

Parameter Drives Sketch1 which drives Feature1 which drives Sketch2.

We have now created a far more complex sequence of events which Inventor must calculate to get a result.

Powerful, certainly, but frustrating if we unintentionally created a relationship we weren't aware of.

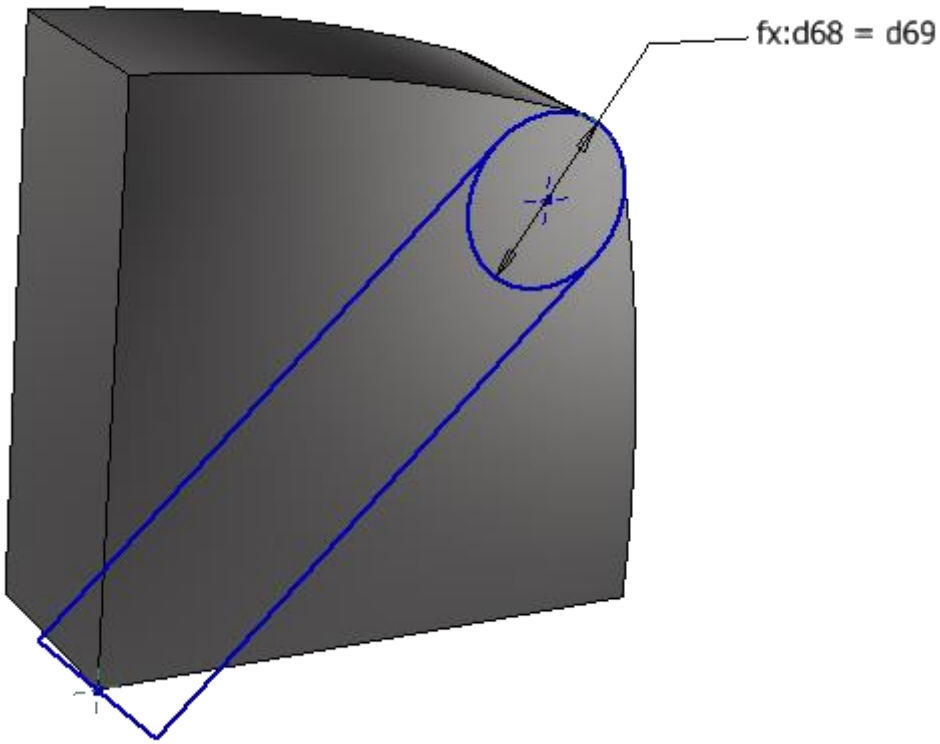

4. **Feature to Feature**

Feature to feature relationships are the most complicated relationships for Inventor to calculate, because it must calculate two ‘branches’ of features before it can compare the two branches to get a result.

Feature to Feature relationships can be the trickiest type of relationship to edit parametrically, because you must make sure that all the contributing features make sense in order for the final feature to make sense.

Parameter Drives Sketch1 which drives Feature1 which drives Sketch3 which drives feature 3.

Parameter2 Drives Sketch2 which drives Feature2 which also drives Feature 3.

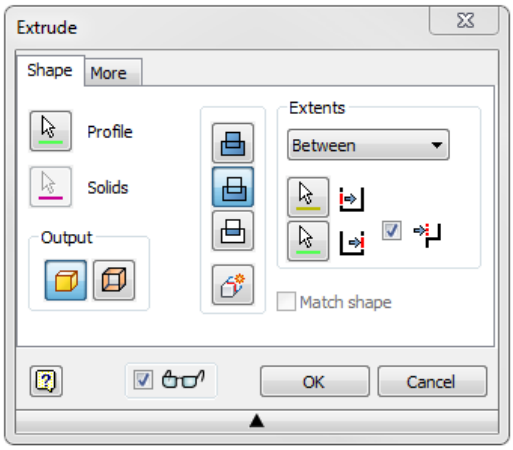

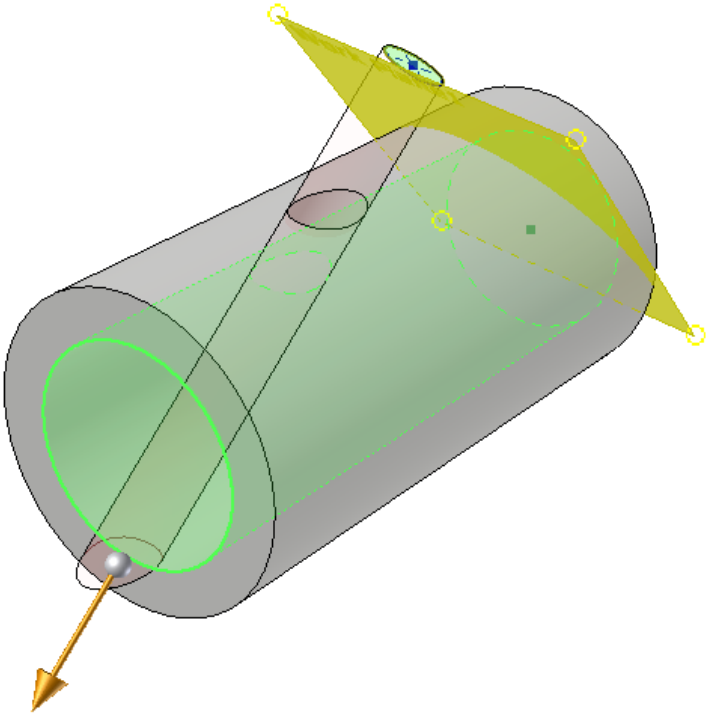

Model template checklist

Use this checklist to make sure that you have a robust template for parts, assemblies and presentations.

General

- ☐ Create a Parameter naming schema
- ☐ Create a Feature naming schema

Application options

- ☐ Turn ‘Show Extended Names’ on.

Part template (And Sheet Metal Template)

- ☐ Set the Viewcube orientation
- ☐ Set the default view
- ☐ Re-Name origin Planes

Optional

- ☐ Edit Body and Surface prefixes
- ☐ Create a UCS base feature
- ☐ Create named parameters
- ☐ Create a Layout sketch

Assembly template (And Weldment Template)

- ☐ Set the Viewcube orientation
- ☐ Set the default view
- ☐ Re-Name origin Planes

Optional

- ☐ Edit Body and Surface prefixes
- ☐ Create a UCS base feature
- ☐ Create named parameters

Presentation Template

- ☐ Set the Viewcube orientation
- ☐ Set the default view

Modelling checklist

Use this checklist to ensure that you are approving your design in a methodical manner.

Planning

- ☐ What parameters will drive your model?
- ☐ In which orientation will you create your model?
- ☐ Where would you like the origin (0,0,0) to end up when your model is finished?
- ☐ How will you name your features and bodies?

Modelling

- ☐ Create Named Parameters
    - Use formulas to add design intent
    - Add a comment to describe what the parameter does
    - Use Multi-Value parameters where possible
    - Rename other important parameters as you go
- ☐ Create Layout Sketches
    - Define the overall size of the design
    - Define key datum points or lines
- ☐ Create Datums
    - Create UCS, Work features or Extruded surfaces to host feature sketches.
- ☐ *Flex*!
- ☐ Create Feature Sketches
    - Feature sketches only reference the layout or datum's, not each other and not other features.
    - Add text notes on sketches to communicate design intent.
- ☐ Create Features which add volume
    - Extrude, Revolve, Thicken, Rib, Coil, Sweep, Loft.
- ☐ *Flex*!
- ☐ Create features which modify existing features
    - Draft, Shell, Thread.
- ☐ *Flex*!
- ☐ Create features which remove volume.
    - Trim, Hole, Emboss, Delete face.
- ☐ *Flex*!
- ☐ Create Pattern features
    - Mirror, Pattern.
- ☐ *Flex*!
- ☐ Create edge consuming features
    - Chamfer, Fillet (Concave before Convex, Big before small).
- ☐ *Flex*!
- ☐ Direct edits
- ☐ Rename features as you go

- ☐ Use the End of part marker to create features in the right order.
- ☐ Re-order features if necessary
- ☐ Document design intent
    - Parameter comments
    - Rename Features and Bodies
    - Add Engineering notes or 3D Annotations
- ☐ Repeat for multibody models
    - Use 3D Sketches to delineate features that belong to bodies.
- ☐ *Flex*!

Modelling Standards

You don't have to agree with me on standards such as parameter naming or model orientation, but you do need to follow industry standards, or at least get everyone in your office to agree to work the same way!

Here are some topics that you'll need to consider. Please feel free to copy and paste from this section into your CAD manual.

Orientation

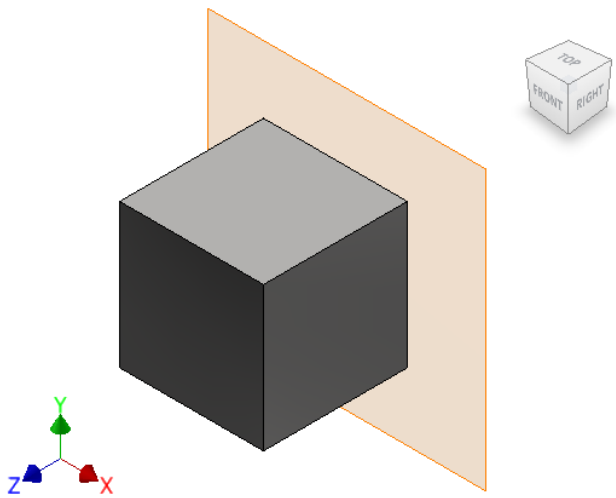

Traditionally Engineers have always drawn components from the front. This makes the coordinate system:

X = Left/Right

Y = Up/Down

Z = In/Out

This is how Inventor is set up.

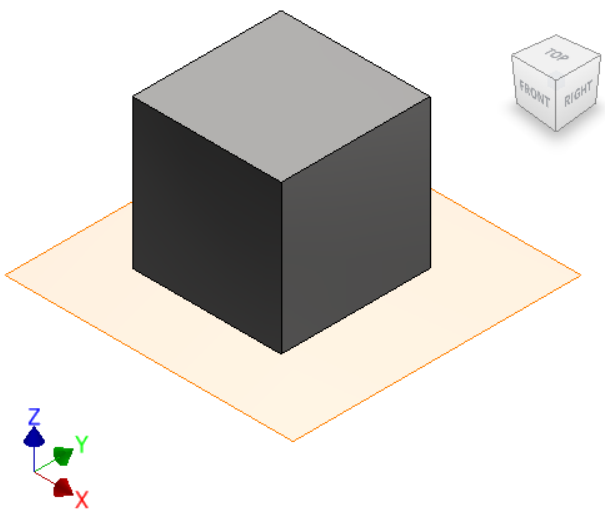

Traditionally Architects have always drawn their building layouts from the top. This makes the coordinate system:

X = Left/Right

Y = Forward/Backward

Z = Up/Down

This is how AutoCAD is set up.

Engineering = Y Up

Architecture = Z Up

If you work with AutoCAD or Revit users, or you often share files with colleagues in the Architecture/Construction, you may want to model with 'Z up'.

You can set your Inventor template to use 'Z up' by adjusting your view cube orientation and saving your file as the 'Standard' template (remember to do this for Parts, Assemblies and presentations).

Origin Planes

You can't edit or delete the Origin planes, but you can re-name them. Rename the Origin planes in your template files to match your view cube orientation to subtly reinforce your modelling orientation standard.

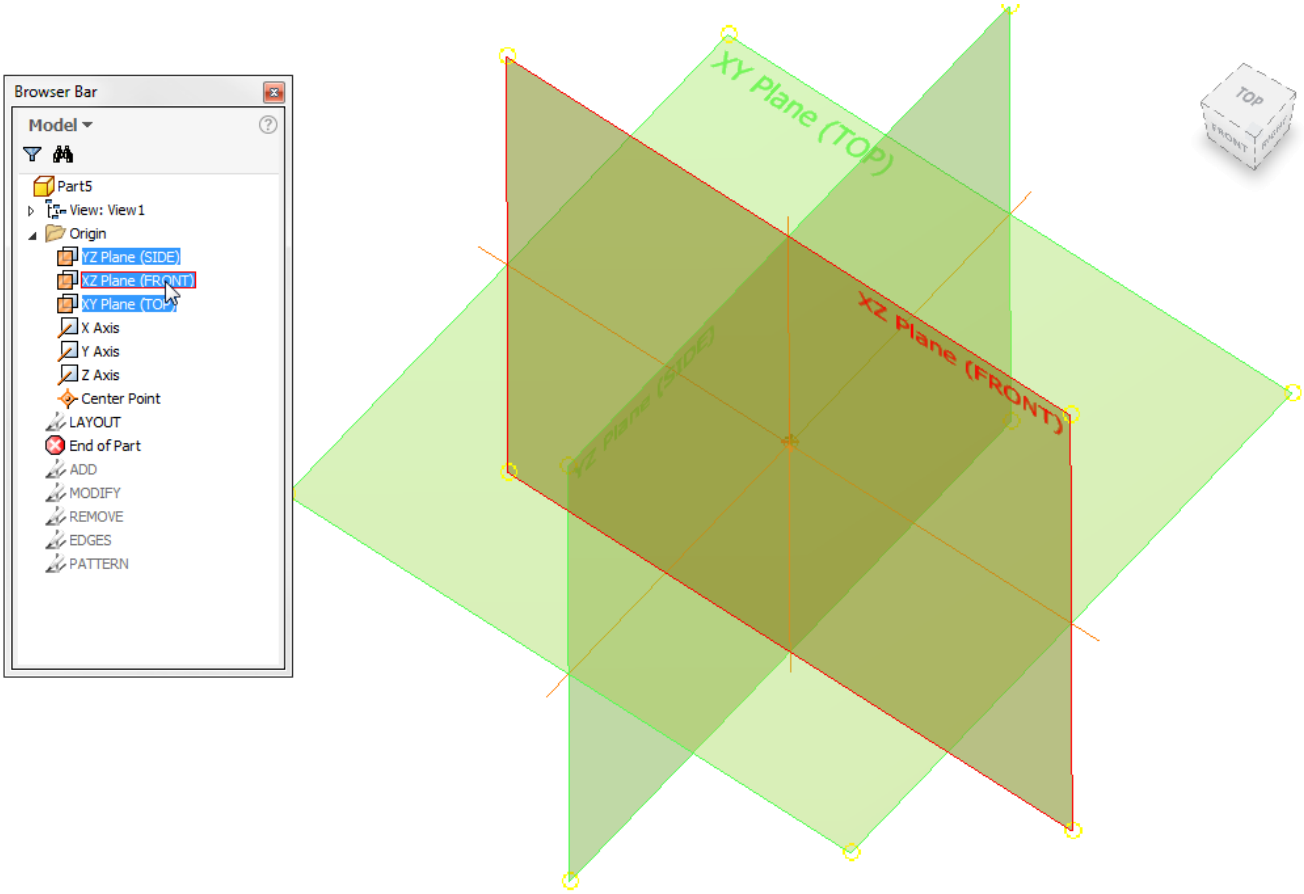

Parameter naming

Parameters in Inventor represent placeholders for values that can change. Parameter names must follow some rules set down by Inventor.

To improve communication between users, it's a good idea to agree on some conventions for parameter naming.

You might also want to consider if there are any standard named parameters that should be in every model file? If so – include them in your template (and should they be set to 'export' so that they can be read into the BOM/Parts List?).

Shorter parameter names are easier to remember and to type as you are modelling but can get obscure. All User Parameters should have a comment, to explain their function.

Parameter naming rules:

1. Parameter names are case sensitive (length & LENGTH are both acceptable).
2. Parameter names must start with a letter (but can include numbers).
3. Parameter names cannot contain spaces.
4. Parameter names can only include the Underscore '_' and Colon ':' characters.

Examples

OverallWidth

Overall_Width

OAwidth

OA:Width

Some parameter names are reserved by Inventor and cannot be used. Please see the appendix for details.

***Tip**: Don't forget that you can rename parameters on the fly. Type the formula:*

'Parameter name = Parameter Value'

into any input box to rename the parameter as it is created.

Documenting Design Intent

So – you've built a component with solid design intent. Simply by changing a few parameters your component updates in a predictable fashion. Well done you!

Now, how are your team going to know which buttons to push to update your component?

Communication of your Design Intent is super important if you want your colleagues to know just how hard you worked to build them a useful resource.

So – how to we document our design intent?

***Tip**: Don't forget that it might be YOU who must come back and edit this design in three months. Will you remember how to edit your own model?!*

Parameter comments

The first thing we want anyone to do upon opening our model – is to open the parameters manager and look for useful parameters.

If we have created a named parameter called ‘Length’ and our colleague wants to change the length of the component – the design intent is obvious. Your colleague will thank you for making their life so easy!

It’s often not possible to capture the entire design intent in a parameter name, so add a comment to clarify what the parameter is controlling.

***Tip**: Create user parameters that capture your design intent before you model anything. If you can’t think of them all up front, don’t worry – just come back and add more user parameters as you need them.*

If you want to keep track of a parameter (for example, in an equation), but it won’t be a driving parameter. Use the ‘Parameter name = Parameter value’ formula to rename parameters as you go along.

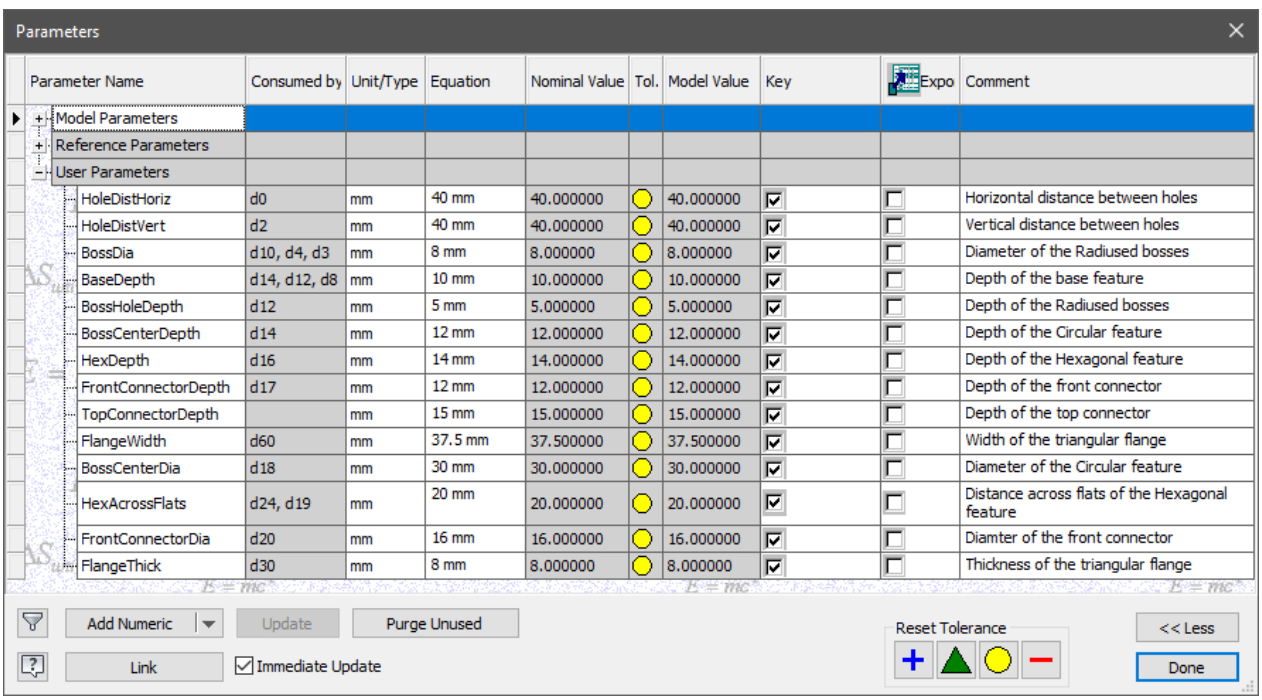

Parameter Name	Consumed by	Unit/Type	Equation	Nominal Value	Tol.	Model Value	Key	Expo	Comment
Model Parameters									
Reference Parameters									
User Parameters									
HoleDistHoriz	d0	mm	40 mm	40.000000		40.000000	☑	☐	Horizontal distance between holes
HoleDistVert	d2	mm	40 mm	40.000000		40.000000	☑	☐	Vertical distance between holes
BossDia	d10, d4, d3	mm	8 mm	8.000000		8.000000	☑	☐	Diameter of the Radiused bosses
BaseDepth	d14, d12, d8	mm	10 mm	10.000000		10.000000	☑	☐	Depth of the base feature
BossHoleDepth	d12	mm	5 mm	5.000000		5.000000	☑	☐	Depth of the Radiused bosses
BossCenterDepth	d14	mm	12 mm	12.000000		12.000000	☑	☐	Depth of the Circular feature
HexDepth	d16	mm	14 mm	14.000000		14.000000	☑	☐	Depth of the Hexagonal feature
FrontConnectorDepth	d17	mm	12 mm	12.000000		12.000000	☑	☐	Depth of the front connector
TopConnectorDepth		mm	15 mm	15.000000		15.000000	☑	☐	Depth of the top connector
FlangeWidth	d60	mm	37.5 mm	37.500000		37.500000	☑	☐	Width of the triangular flange
BossCenterDia	d18	mm	30 mm	30.000000		30.000000	☑	☐	Diameter of the Circular feature
HexAcrossFlats	d24, d19	mm	20 mm	20.000000		20.000000	☑	☐	Distance across flats of the Hexagonal feature
FrontConnectorDia	d20	mm	16 mm	16.000000		16.000000	☑	☐	Diamter of the front connector
FlangeThick	d30	mm	8 mm	8.000000		8.000000	☑	☐	Thickness of the triangular flange

Feature Naming

If you have more than a few features, it can be difficult for the next person who opens your model to work out how the features are related.

By renaming your features, you can provide an easy 'Breadcrumb trail' to guide your colleagues through your model's structure.

Before you start modelling, give a little thought to the features in the design. Can you give them obvious, distinct and unique names?

Remember that Inventor will not let you give two features the same name, even if those features are of different types, so append the feature name with the feature type

Example Feature suffixes:

Ext = Join Extrusion

Cut = Cut Extrusion

Rad = External Fillet (Radius)

Fil = Internal Fillet

Rev = Revolve

Mir = Mirror

Pat = Pattern

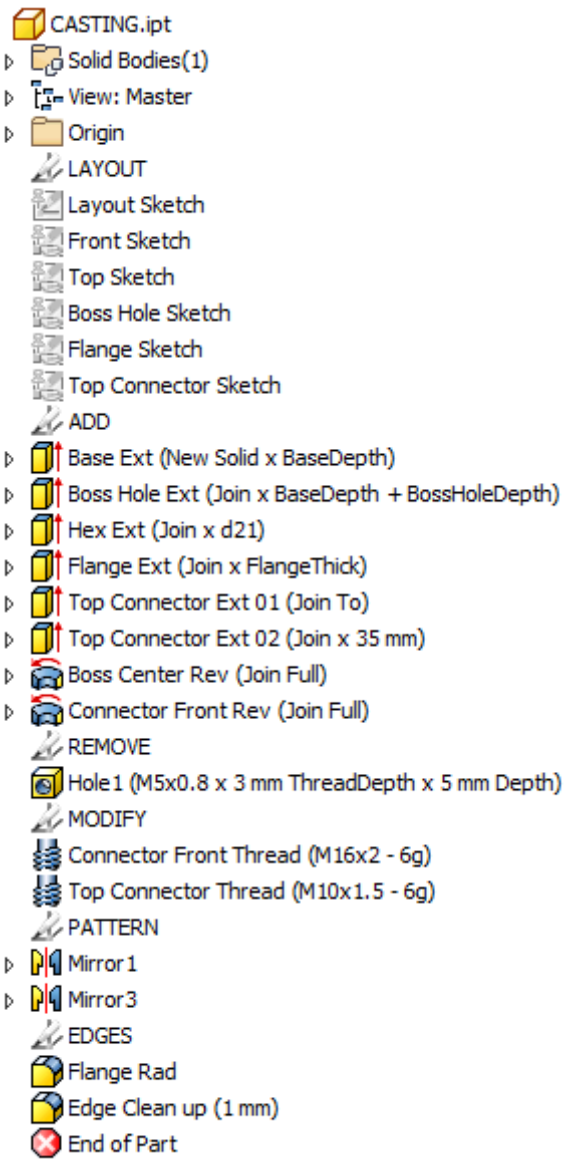

Example feature naming

- ▷ **Boss** (Solid)
  - ▷ **Boss Hole** (A Hole in The Boss)
    - ▷ **Boss Ext** (The Extrusion that creates the Boss)
      - ▷ **Boss Sketch** (The Sketch that the Boss features are based on)

***Tip**: The 'Show Extended Names' Option will show additional information next to your features such as extrude length or Fillet Radius.*

Turn on extended names, by clicking in the model browser > Hamburger menu > Display preferences > Show Extended names.

Or by visiting, Tools > Application options > Part [Tab] > 'Display extended information after feature node name in browser' [Check box].

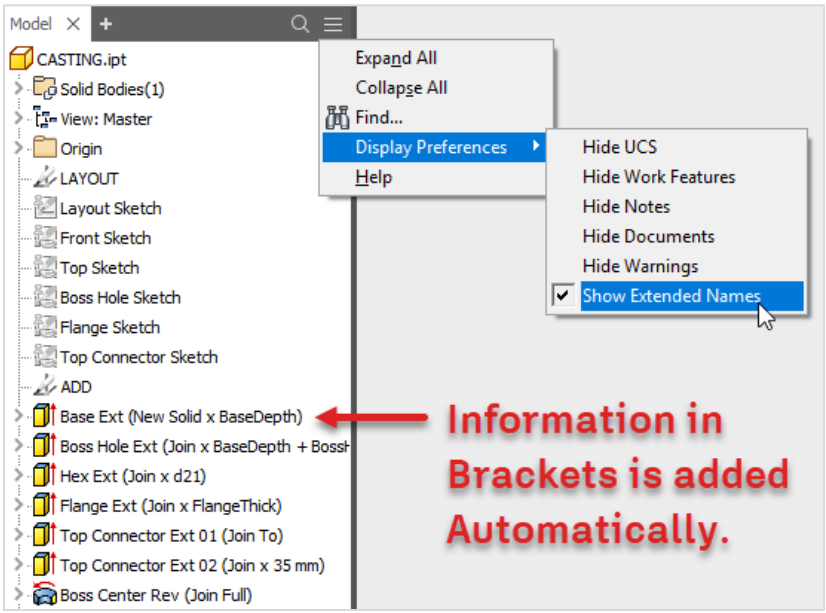

***Tip**: Use the 'Search' option in the Model Browser to find all features with the same root name.*

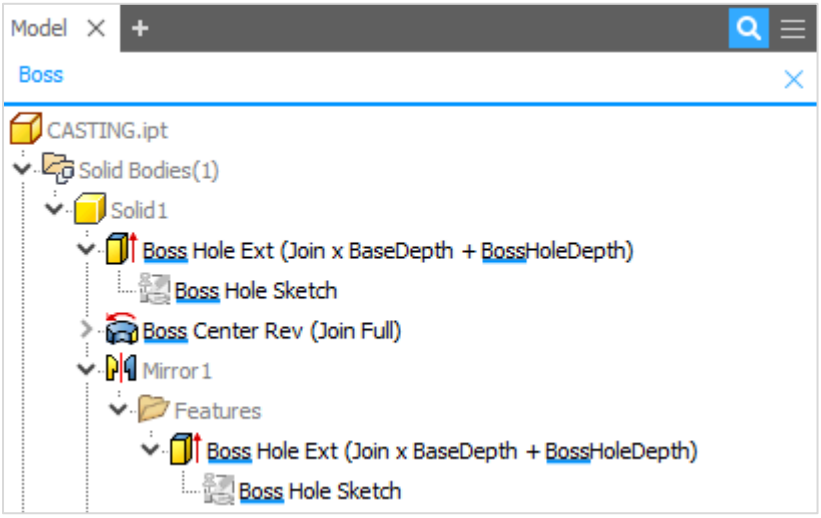

***Tip**: Edit the* **Default prefixes for Solids (Solid) and Surfaces (Srf)** *in part files by visiting: Tools [Tab] > Options [panel] > Document settings [Button] > Modeling [Tab] > naming prefixing [Section] (set this in your template).*

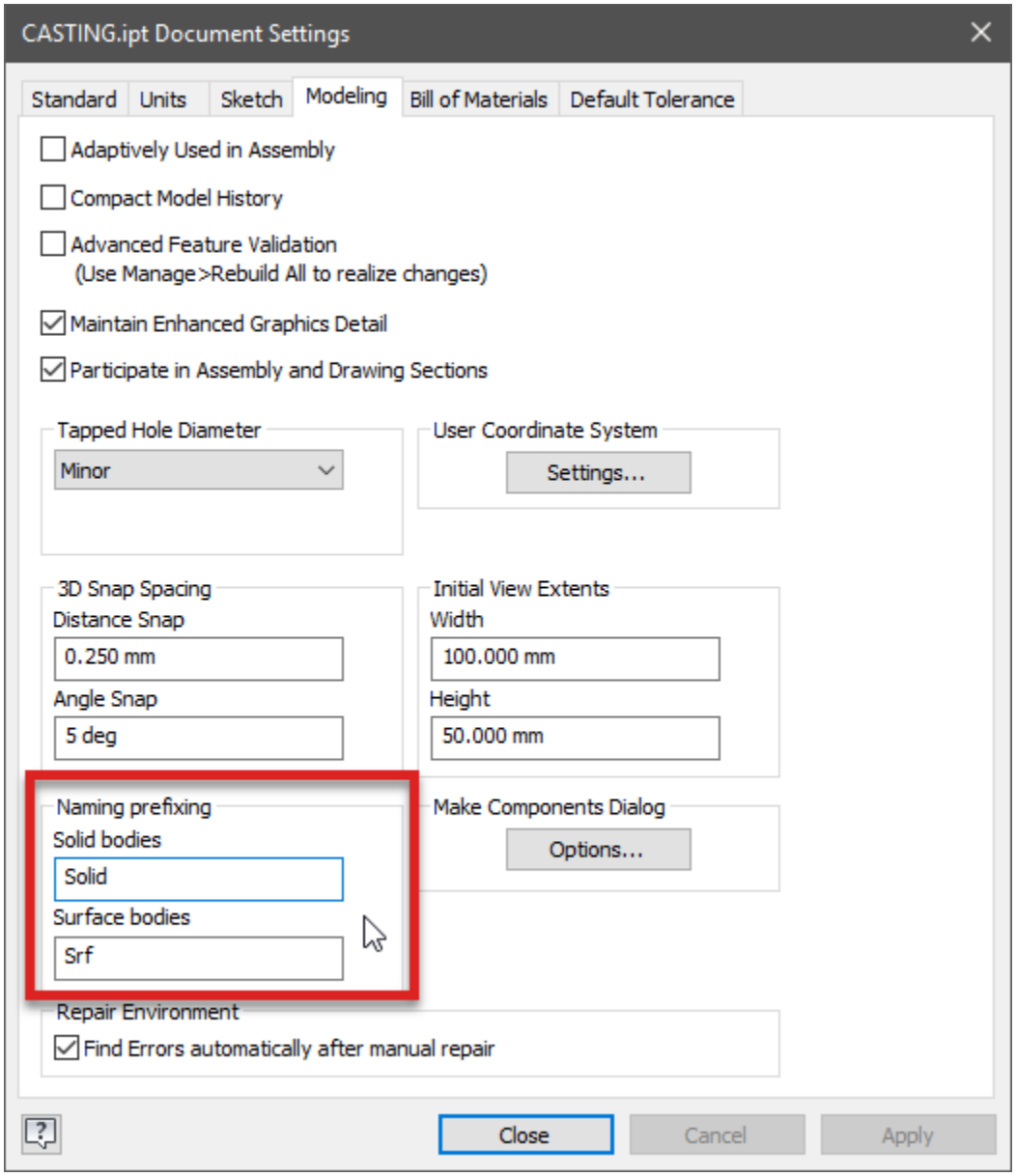

Adding Notes

The more information you can embed in your design, the more likely that your colleagues will be able to figure out your design intent.

Want to leave a note in your file to say:

'I'm not finished with this model yet!'

Or

'Use the imbedded iLogic form to edit this model'

We have several options available. I suggest that you discuss this with your team and pick one that everyone can use consistently.

Engineers Notebook

Right click on any part file in an assembly, or any sketch edge of feature in a part file and pick 'Create Note' from the context menu.

You will automatically be taken to the Engineers notebook, where you will find a screen shot of your component, and a text note for you to add your information to.

More information in the online help:
https://help.autodesk.com/view/INVNTOR/2019/ENU/?guid=GUID-19FA6297-F980-456D-A53F-226DA9870B73

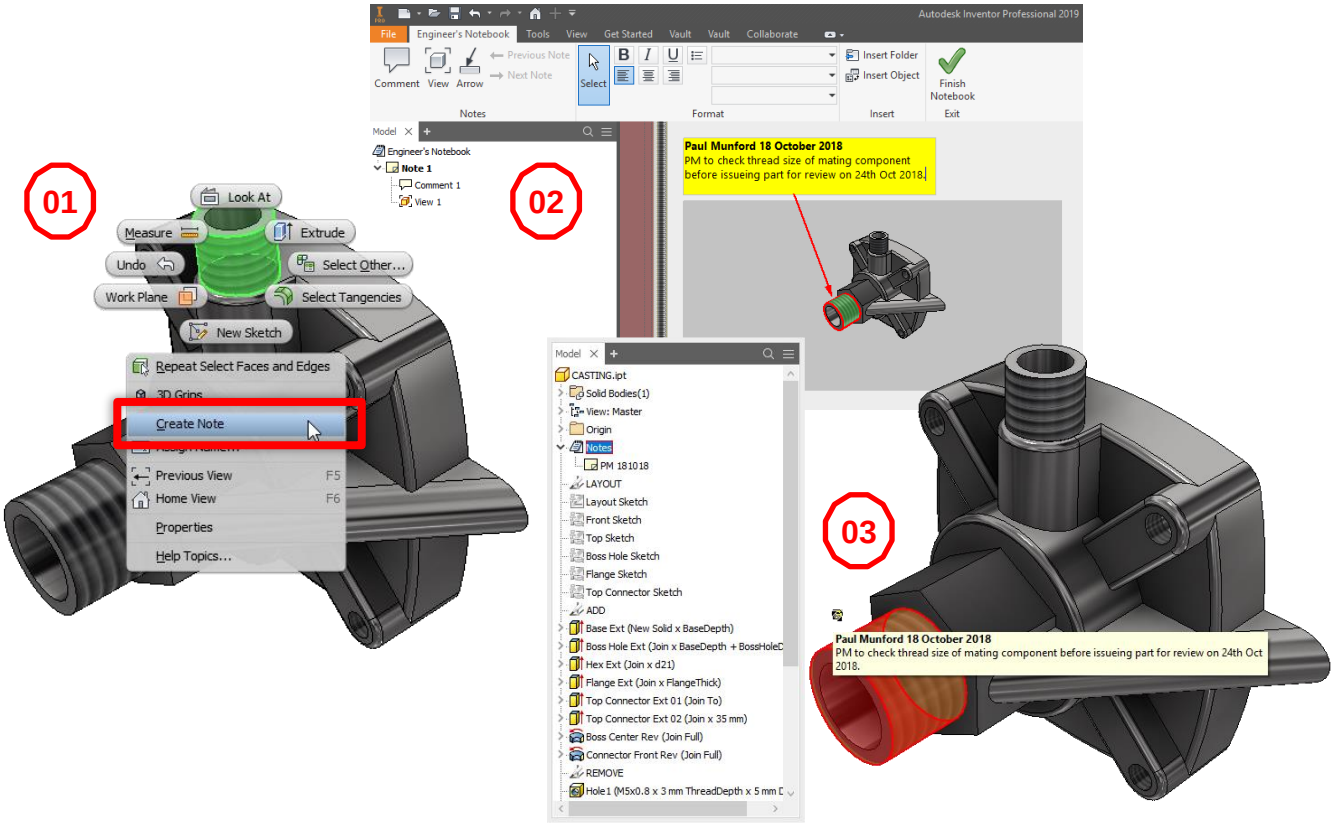

Model based Annotation – General note

Model based annotation is relatively new. If you haven't tried it out yet – give it a go.

My favourite is the 'General Note' tool, which creates a note which sits in the corner of your screen and remains there – even if you rotate the model.

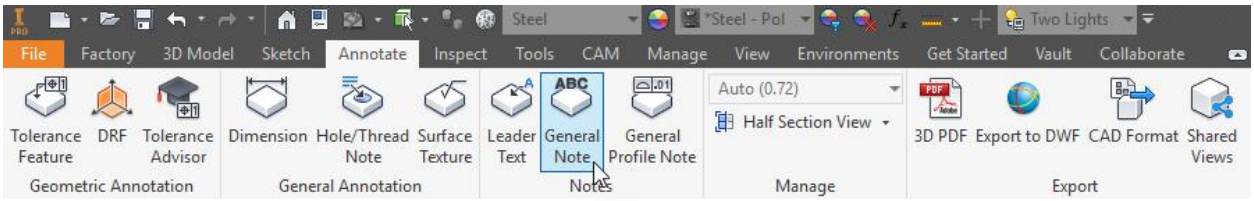

20181018 PM to check thread size of mating components before issue for review on 24th Oct 2018.

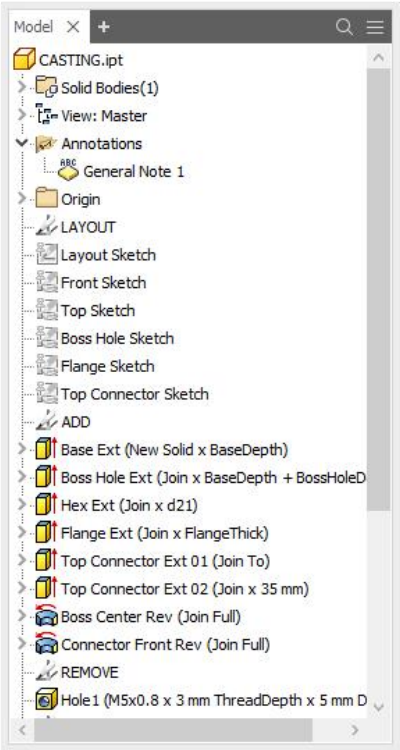

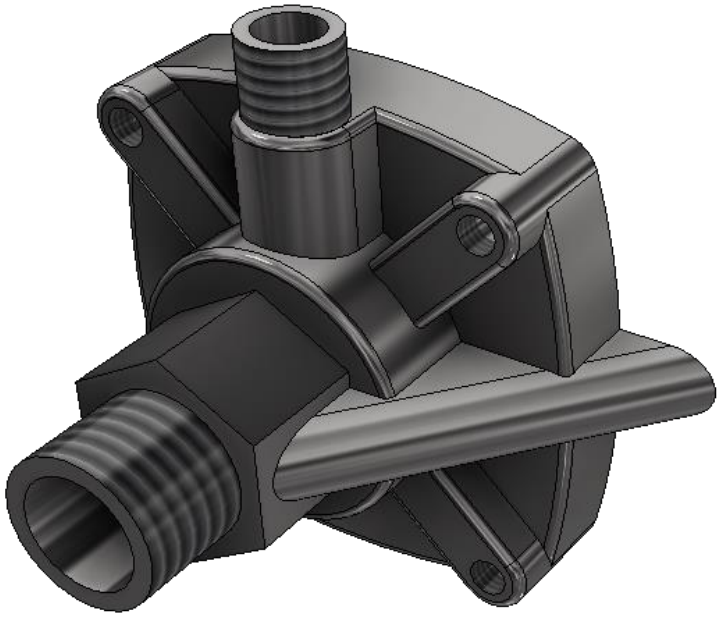

Sketch notes

It’s old school – but it works. Leave a note by adding text in your sketches to help your colleagues understand your design intent. For example, you could label your features:

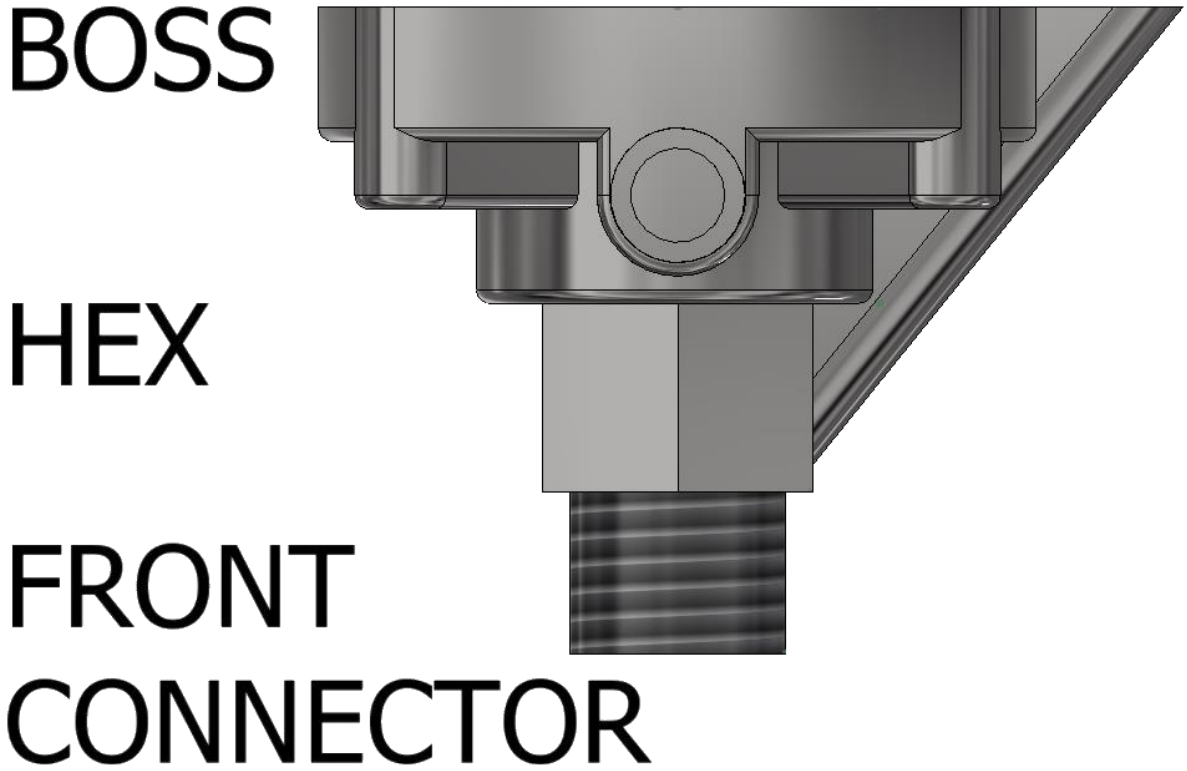

Center Point

In cartesian coordinates, the Center Point (or Origin) is the 0,0,0 point of your model.

Modelling around the origin allows us to reference the Center Point as a fixed datum, around which our part can change in a predictable fashion.

The center point may be in a different spot for every item you model, but it should be something you think about before your start modelling.

'Where do I want the origin to end up, when I've finished modelling this thing?'

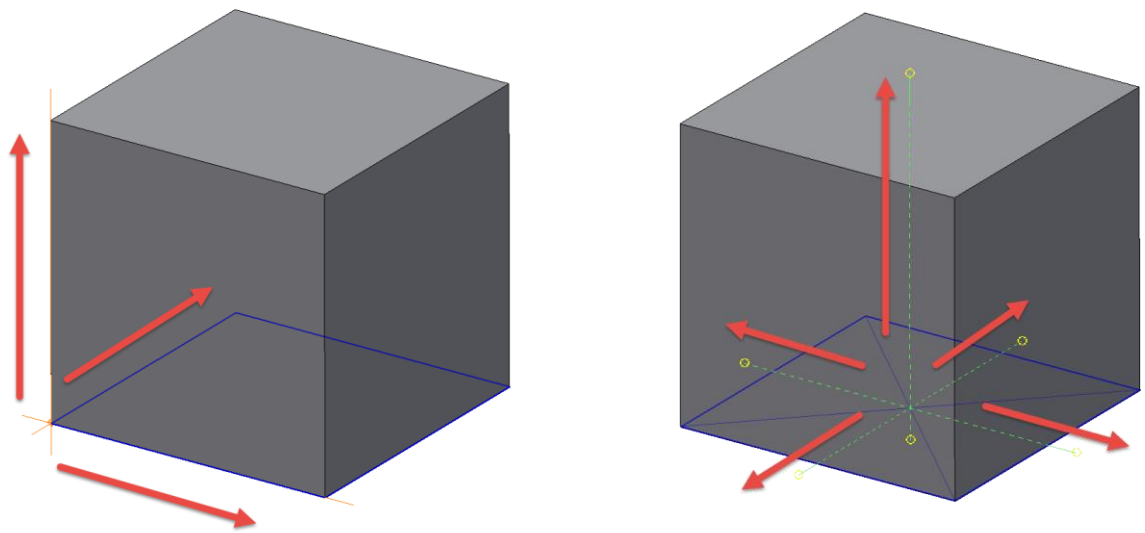

Layout Sketches

If anything goes wrong with your Inventor model, it's likely to go wrong with a sketch.

When you learned Inventor – you were probably given the advice:

'One sketch per feature'

This advice is meant to guarantee simple sketches, which only contain one closed loop. When you edit the design, Inventor is unlikely to pick the wrong loop if there is only one choice!

The downside of this technique is that sketches are unrelated, which means that Design Intent is not captured.

The other extreme is overly complex shared sketches which can be difficult to edit and difficult to diagnose when things go wrong.

A layout sketch could be thought of as a 'Skeleton' which contains the main datums for a component.

Feature sketches are related to the layout sketch with projected geometry. When the layout sketch is driven by a parameter change, the features sketches go with it.

All sketches shold be fully constrained.

There – I said it. You can take it from me. Quote me on this:

‘Fully constrained means fully predictable’.

If you’re sketches aren’t fully constrained, you can precit behaviour when you edit your component.

Note the indicator in the bottom right of the skech envoironment to see how close you are to being fully constrained.

You may also notive a ‘push pin’ icon on your sketch nodes in the browser. This is a great way to check to see if a sketch is fully constrained without having to open the sketch first.

If you don’t know what you need to do to fully constraint your sktech, use the degree of freedom indicator or the Auto-dimensiong tool to help.

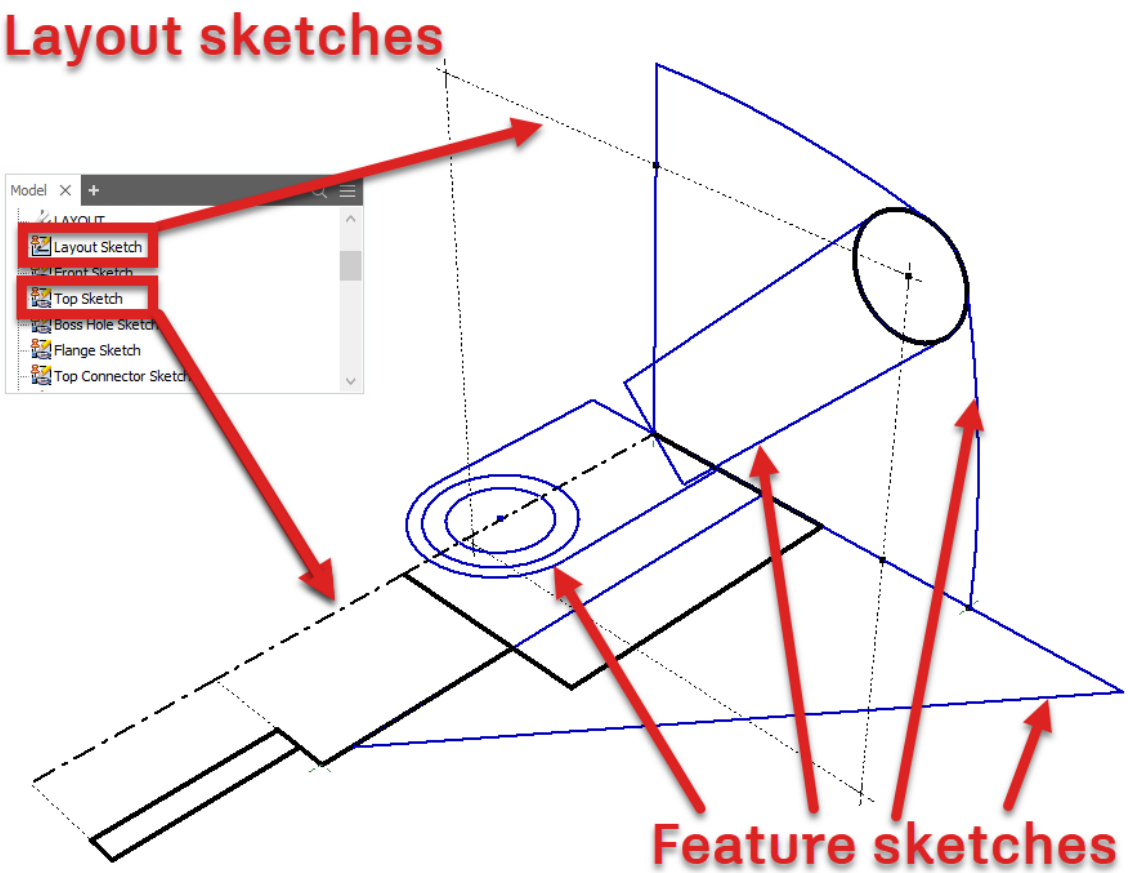

Datum Features

When we build a model by relating each sketch to the preceding feature, we can unintentionally build a house of cards.

When the Base Feature changes, all dependant sketches and features will also update. This can be extremely powerful (if this is what we intended) or extremely frustrating (when it isn't).

Instead of basing a sketch on a feature, we can isolate the sketch from the preceding feature by basing the sketch on a datum plane. A datum plane can be a UCS, work plane or surface extrusion, which is driven by a named parameter or our layout sketch.

The link back to the layout sketch preserves Design Intent. The datum plane isolates the sketch from previous features, allowing us re-order the feature tree, or even delete features without upsetting our model.

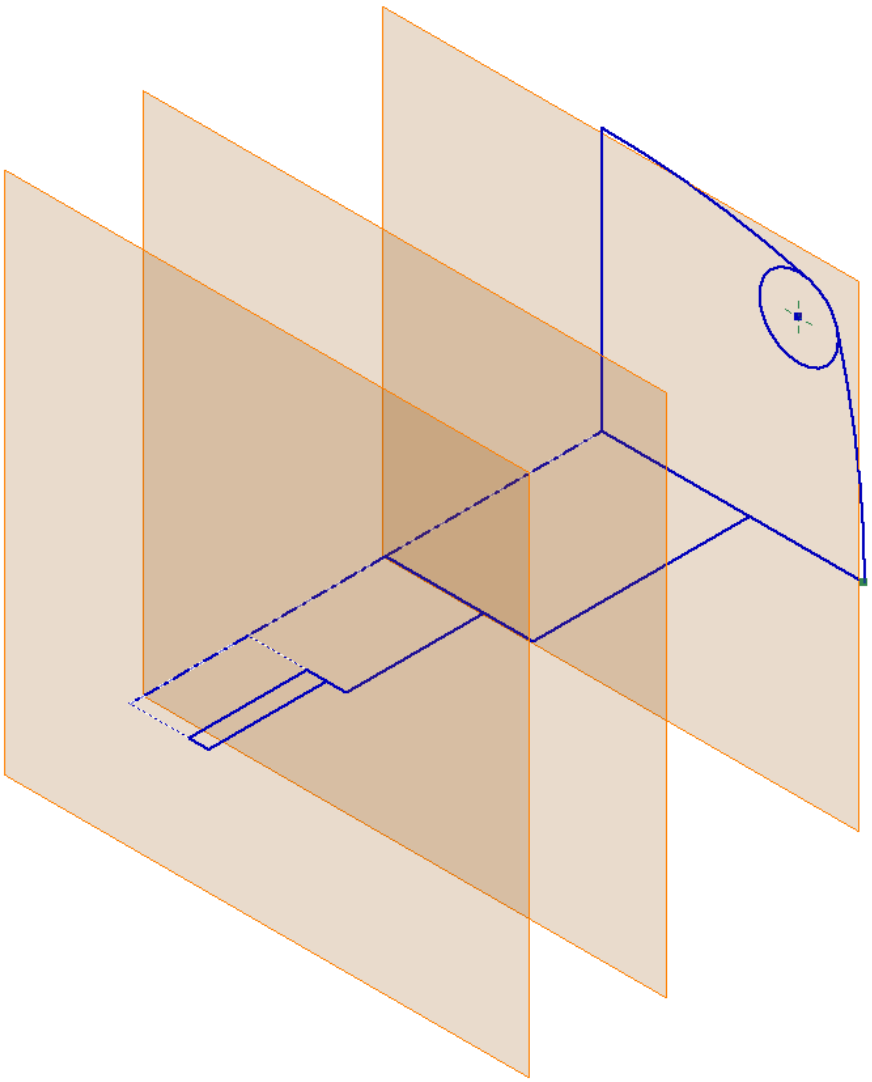

Feature build order

This idea of grouping similar features comes from Dick Gebhard's 'Resilient modelling strategy'. In practice we've found maintaining feature groups to be problematic – features must be in the right order to get the desired result!

However, working through this exercise with my students, we've found that working your way through the modelling process in this order works well and can lead to better structured, more stable components.

Although you create the features in the following order, this is not necessarily the order which they will end up in the feature tree. Use the 'End of Part Marker' (EOP) to place features in the position they need to be for your desired result.

Add >	**Modify >**	**Remove >**	**Pattern >**	**Edges**
Extrude	Draft	Trim	Mirror	Chamfer
Revolve	Shell	Hole	Pattern	Fillet
Thicken	Thread	Emboss		Concave before Convex
Rib		Delete face		Big Before small
Sweep				
Loft				
Coil				

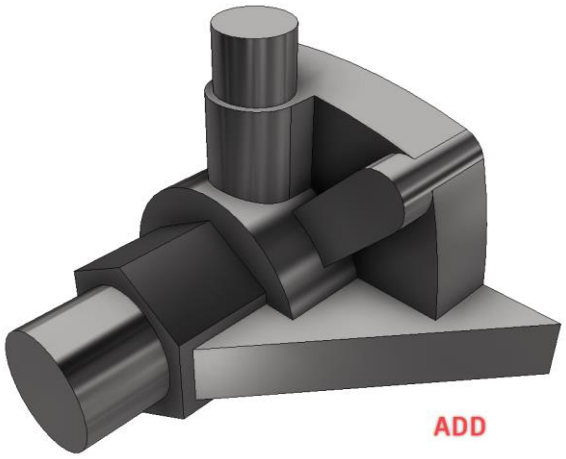
ADD

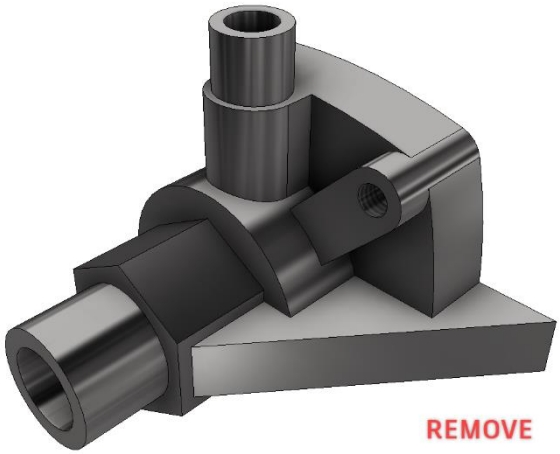
REMOVE

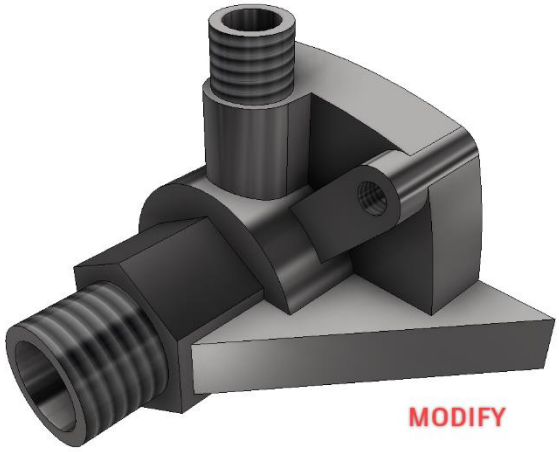
MODIFY

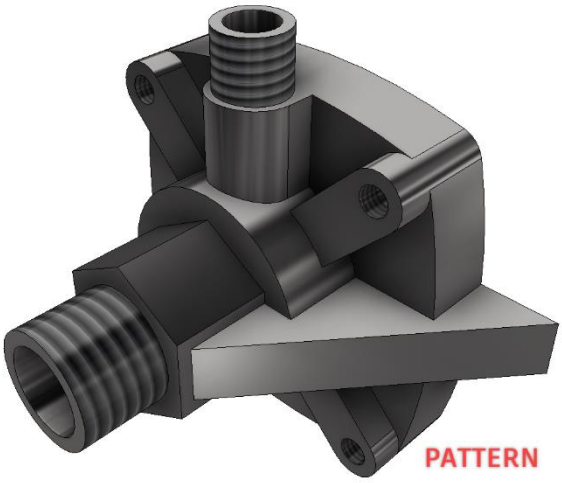
PATTERN

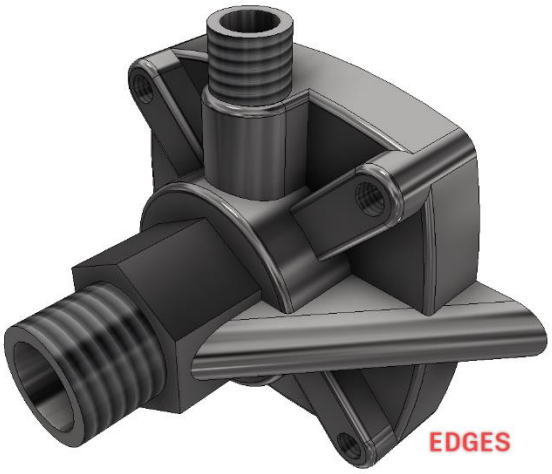
EDGES

Feature grouping

When working on a multibody file, it can be helpful to group features together that belong to the same body.

Sadly, we don't have folders or feature grouping for the model browser in the Inventor part environment.

Instead I use 3D sketches, which I name in ALL CAPS and then turn their visibility off. This gives me just enough of a visual que to be able to skim up and down the browser efficiently.

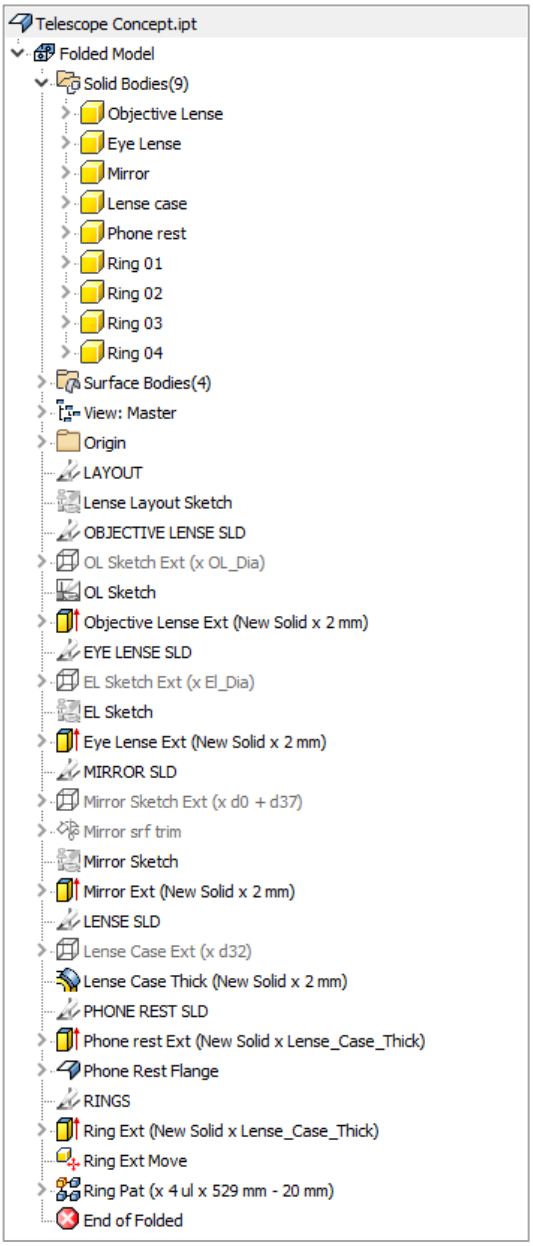

Flex your design

Test your designs! If you have invested effort building a component which can change over time – don't simply assume that your model will update predictably!

Don't forget, it could be you who must perform a quick Friday afternoon update to a model. No-one wants to be dealing with an exploding model when they have a deadline to meet.

I've stolen a term from Revit designers here, they call this testing 'Flexing' the model.

Flex early, flex often, flush any unpredictable behaviour out of your design while the design intent is fresh in your memory.

It's far more difficult to correct mistakes when you are revisiting a component after a few months working on other projects.

Why do fillets and rounds come last?

Because these features consume edges. Creating a sketch on a face and then projecting an edge that is consumed by a fillet or chamfer feature will almost guarantee your part to fail when you come to make changes later!

Multi-fillets

Although it's possible to create one fillet feature which can fillet multiple edges with multiple different radii, this isn't usually as efficient as it might seem.

If a fillet goes bad, it can be difficult to diagnose which edge has the problem. In addition, multi fillets can be limiting for downstream use. Instead of suppressing each fillet one at a time – you can only suppress the whole bunch.

Creating each fillet of a given radius as a separate feature, will make the feature tree longer – but it preserves design intent and makes the final model much more useful downstream.

If you have complex fillets to apply, take a look into 'Ruled Fillets'.

iLogic forms to communicate design intent

Even if you take the time to name and comment your key parameters, it can be confusing for your colleagues to trigger the change they need.

A really simple way to communicate design intent is to use an iLogic form to control the part.

1. Open the iLogic browser
2. Create an iLogic form
3. Drag and drop parameters
4. Click on the button to trigger the form.

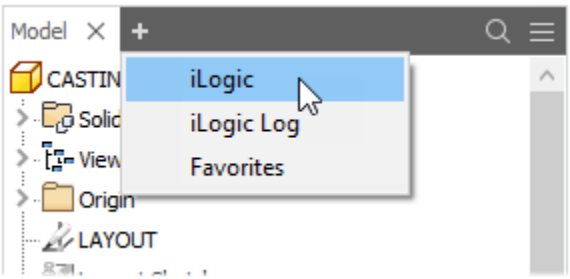

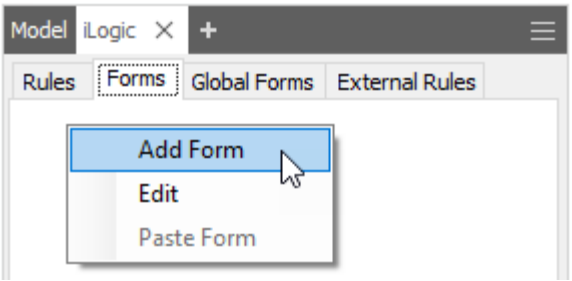

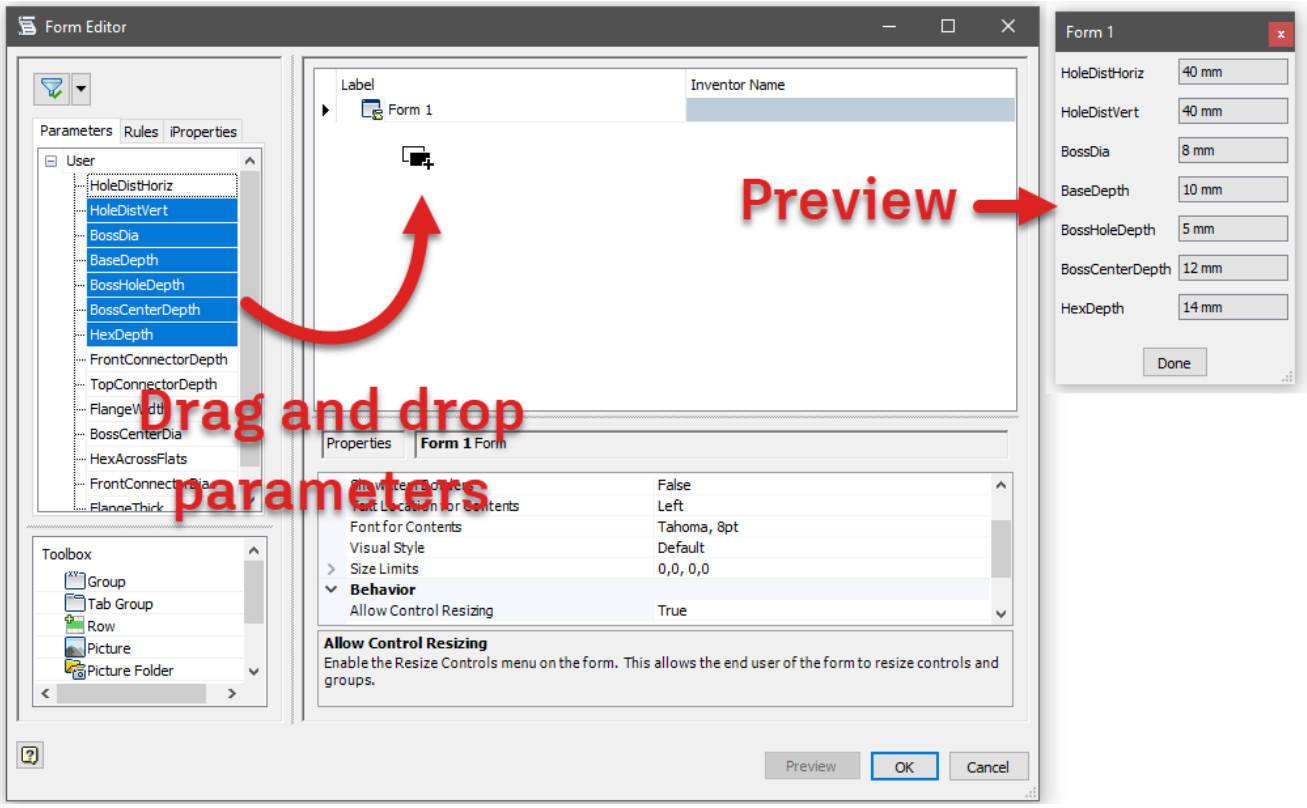

iLogic form pro-tips

Limit choice to the available sizes by making parameter multi value.

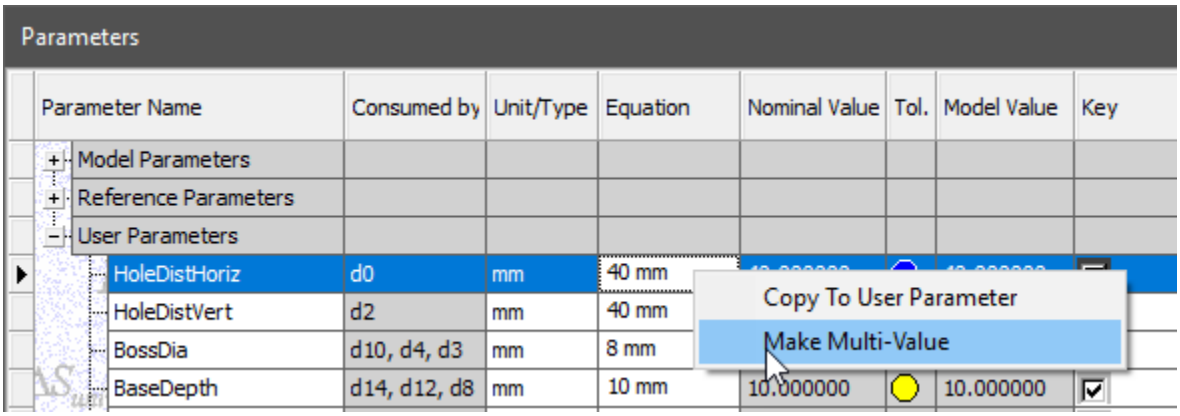

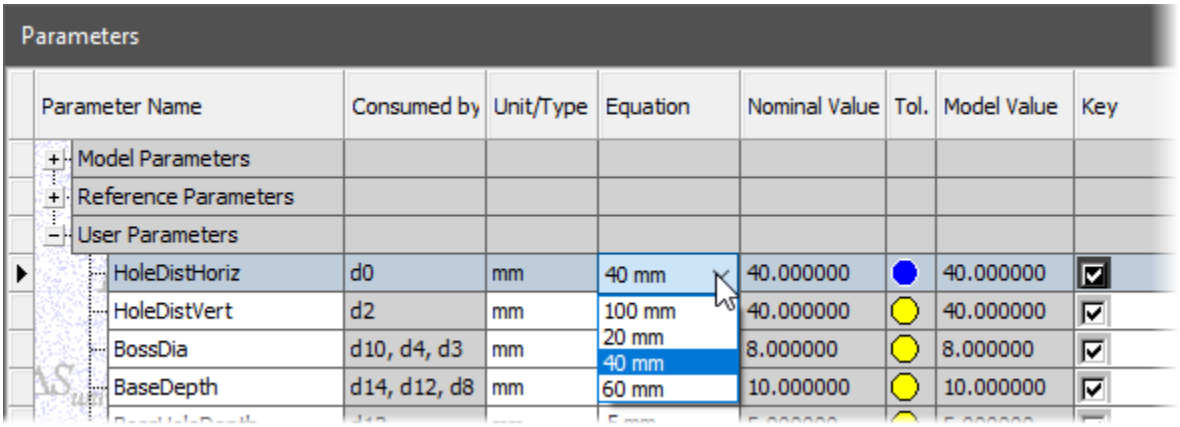

Edit the name of your form. The name of your form can be seen on the button that triggers your form to appear.

Edit the control type to ‘slider’. A slider control has minimum, maximum and increment properties. This will limit users from picking a value which is out of range.

Slider Properties	5; 50; 5
Minimum Value	5
Maximum Value	50
Step Size	5

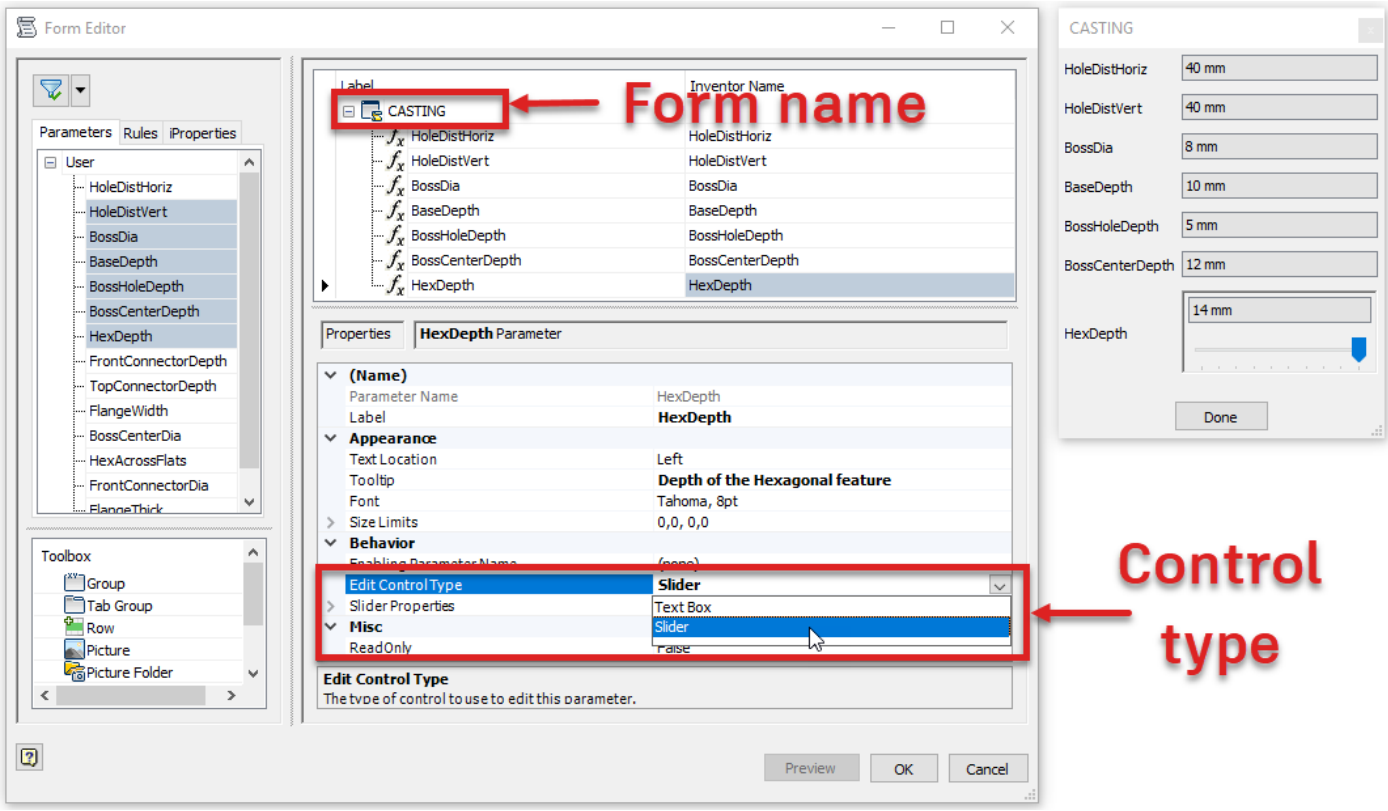

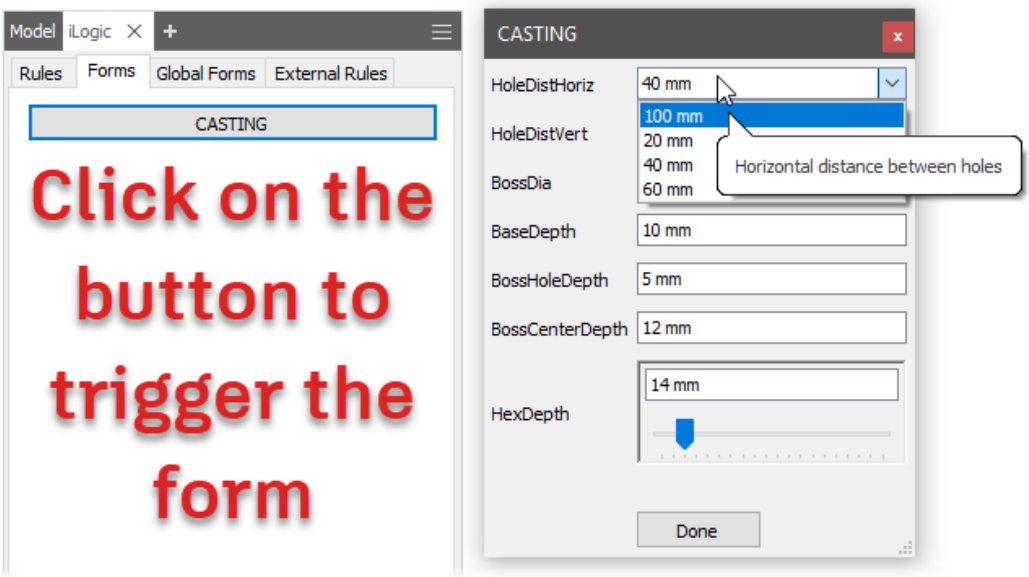

***Note**: Your parameter comments become tool tips – no effort is wasted!*

Using iLogic to prevent user error

Nothing is foolproof! Even though we went to all this effort to make the Design Intent of this component clear, we may still want to protect our model from the unexpected.

'Don't let a management problem become a technology problem'

Mark Kiker

Although I prefer good communication over complex technical solutions, iLogic can be helpful in this situation.

To create a new rule, right click in the iLogic browser > Rules tab, and choose 'Add Rule'.

Now copy and paste the following code, replacing [Parameter_name] with the name of the parameter you want to control.

```
If [Parameter_Name] < 40 mm Then

MessageBox.Show("Out of Range Error" & vbLf & "resetting 'HoleDistHoriz' to
40mm", _
"Out Of Range Error")

[Parameter_Name]  = 40 mm

End If
```

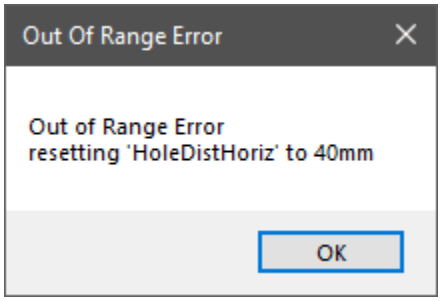

This code reads:

If [Parameter_Name] is less than 40mm then, show a message box – with the title

'Out of Ranger Error'

which includes the message

'Out of Ranger error, resetting the parameter named 'HoleDistHoriz' to 40mm'

And then set the parameter HoleDistHoriz' to 40mm.

iLogic can help you to prevent your colleagues changing values which will break your design intent.

Maybe this is slightly harsh?

Instead of resetting a value, maybe you could change the appearance of a component to indicate an error?

I'm sure that you can think of many ways to use iLogic to prevent your designs from becoming broken!

To learn iLogic:

Start with this introduction tutorial on the Autodesk Knowledge Network website: https://knowledge.autodesk.com/support/inventor-products/getting-started/caas/CloudHelp/cloudhelp/2015/ENU/Inventor-Tutorial/files/GUID-1414459D-3CF8-4719-8DDF-1AC17CE184F1-htm.html

Check out these free to watch classes on the Autodesk University online website: http://au.autodesk.com/au-online/classes-on-demand/search?full-text=ilogic

Check out Curtis Waguespack's blog 'From the Trenches with Autodesk Inventor: http://inventortrenches.blogspot.com/2013/10/ilogic-how-to-learn-inventors.html

Conclusion

Simple designs require simple solutions. 3D modelling with Autodesk Inventor needn't be restrictive – it's fun!

When you see the opportunity to build designs that will pay you back for your planning and forethought, I hope that you will find the strategies described in the class useful.

Paul Munford

Glossary

Base Feature – The first feature in your model (the one at the top of the browser).

Parent – An item that is referenced by another item.

Child – An item which is referencing, or dependent upon, another item.

Parent Child Relationship – Describes the way parametric CAD can build one-way relationships between items. The actions of the parent change the child. The actions of the child do not change the parent.

Parameter – A placeholder for a value.

Design Intent – The desired outcome when a parameter is changed and the model updates.

Feature – Geometry that creates or modifies a component.

Body – A collection of features in a part file that comprise on solid (Solids and bodies are often used interchangeably).

Multibody – A part file that contains multiple bodies. In a top down modelling workflow, one body represents on part Bodies are subsequently derived to form an assembly.

Solid – An operation in a part file that creates a new body (Solids and bodies are often used interchangeably).

Component – A generic term for parts or assemblies.

Design – a generic term for the collection of documents including parts, assemblies, presentation files, drawings and additional supporting data.

Appendix

Good modelling technique references

B.O.R.N – Base Orphan Reference Node

Limit relationships between features by creating all sketches on the origin planes and referencing all sketched geometry to the center point (Node).

The Center Point and Origin Planes are the default base feature in any Inventor modelling file. They don't have a 'Parent', and so are considered 'Orphaned'.

An advanced technique is to create a UCS (Cartesian coordinate system) as your Base feature. This can be moved and rotated independently of the Center point and origin planes. Limit the number of relationships you create in your model, by referencing every sketch back to this 'Reference node'.

http://blogs.rand.com/files/the-born-technique.pdf

Horizontal modelling

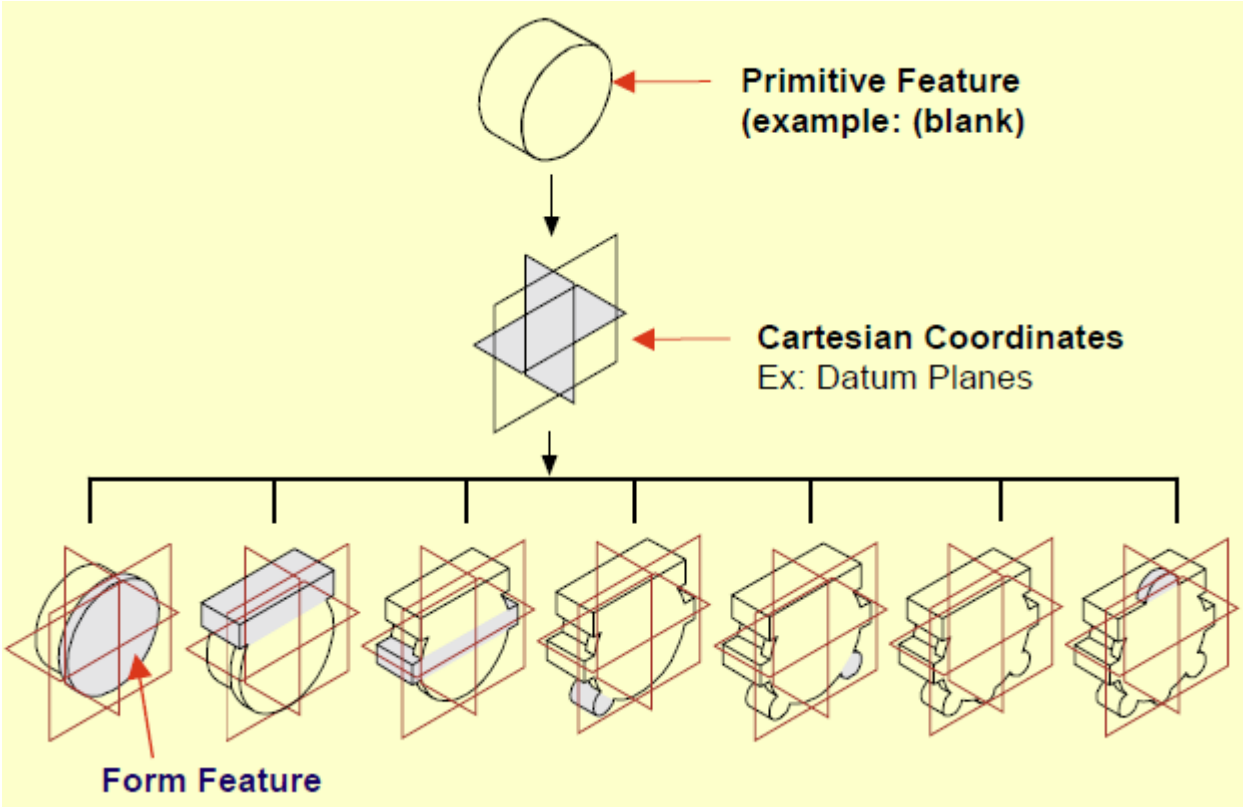

All features are placed on datums. The only parent/child relationship is between the feature and its datum. By limiting the parent/child relationships in the model, features can easily be added, reordered or removed.

https://patents.google.com/patent/US7472044

The Resilient Modelling Strategy (RMS)

Dick Gebhard pulls together best practices from 'B.O.R.N', 'Horizontal Modelling' and many others into one comprehensive, and well thought out CAD Neutral modelling strategy.

"All models are resilient until you try to edit them."
Dick Gebhard

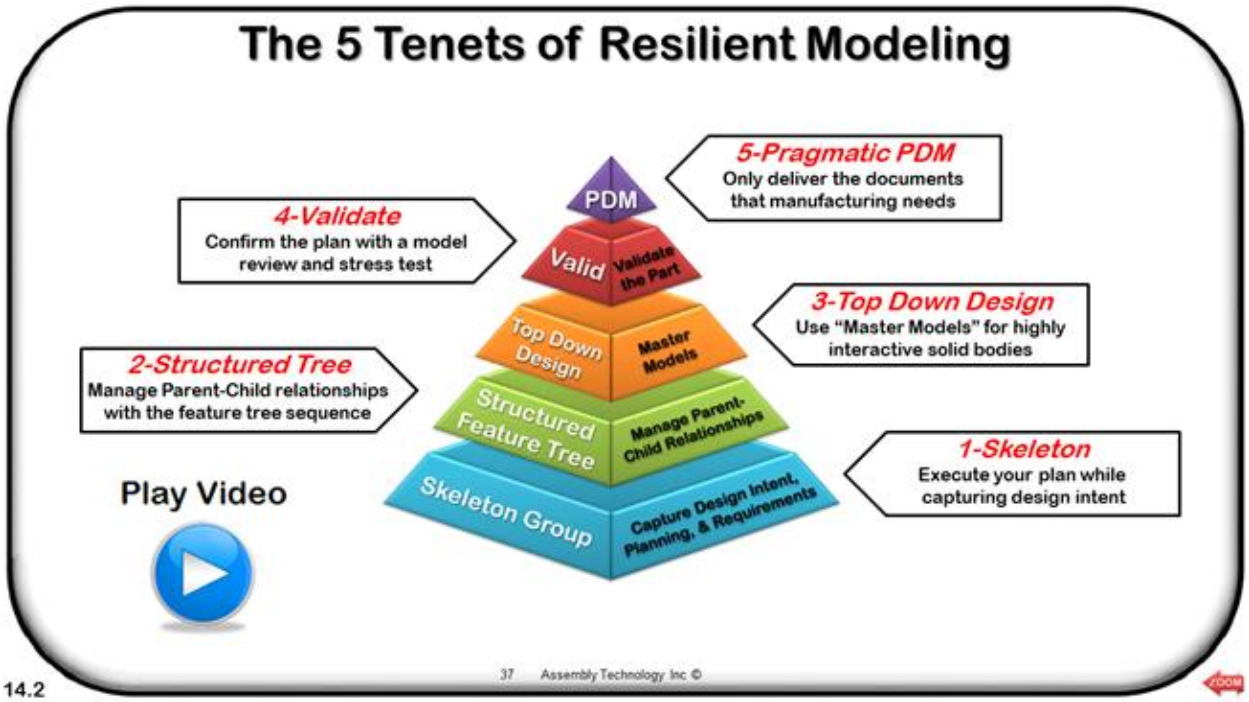

http://learnrms.com/index.html

Other good resources

'The failed Promise of Parametric CAD'
https://www.3dcadworld.com/the-failed-promise-of-parametric-cad/

Parametric CAD Modeling: An Analysis of Strategies for Design Reusability
https://core.ac.uk/download/pdf/61471988.pdf

Get smart & The Seven deadly sins of 3D Part Modelling
http://au.autodesk.com/au-online/classes-on-demand/class-catalog/classes/year-2017/inventor/cp122682#chapter=0

Complex topology and Class A Surface modelling with Autodesk Inventor
http://au.autodesk.com/au-online/classes-on-demand/class-catalog/classes/year-2015/inventor/cp10847#chapter=0

Driving Inventor with the top down – Alternative assembly modeling techniques.
http://au.autodesk.com/au-online/classes-on-demand/class-catalog/classes/year-2013/product-design-suite/ma2604#chapter=0

Reserved Parameter Names

The following Parameter names are reserved by Inventor and cannot be used when custom naming Parameters.

Source: http://blogs.rand.com/files/reserved-inventor-parameter-names.pdf

°	dyne	Gravity	ln	nauticalMile	siemens
A	E	h	log	newton	sign
abs	erg	H	lumen	oersted	sin
acos	exp	henry	lux	ohm	sinh
acre	f	hertz	lx	ounceforce	slug
ampere	F	horsepower	m	ouncemass	SpeedOfLight
asin	farad	hour	max	ouncevolume	sqrt
atan	farenheit	hp	maxwell	Pa	sr
btu	FeetPerSecond	hr	mega	pascal	steradian
c	femto	Hz	meter	peta	switch
C	fl_oz	if	MetersPerSecond	PI	T
cal	floor	in	mho	pint	tan
calorie	foot	inch	mi	pow	tanh
candela	fps	isolate	micron	psi	tesla
cd	ft	J	mil	pt	ul
ceil	g	joule	mile	qt	unitless
celsius	gal	K	MilesPerHour	quart	V
centi	gallon	kelvin	min	rad	volt
circular_mil	gamma	kilo	minute	radian	W
cos	gauss	ksi	mole	random	watt
cosh	giga	l	mph	round	Wb
coulomb	grad	lbforce	mps	rpm	weber
cup	gradient	lbmass	N	s	yard
deg	gram	liter	nano	S	yd
degree		lm		second	