MFG468555

Generative Design: Getting the Results

Robert Savage
IMAGINiT Technologies

Learning Objectives

- Review the Setup and Upload the file we want to use
- Breakdown and Sort the results of the file
- Downloading the file, we want to use
- Modify and use the file in an Assembly

Description

For the last couple of years, I have taught Generative Design classes at Autodesk University. The first years, we did an Introduction to Generative Design Lecture, last year we did a lab showing the process and setup for applying a Generative Design to a part. This year we want to look at the results that you get from running the part and talk about how to interpret the information that you it gives you back. We also want to look at how to download the desired result as a solid model, modified the file for any needed cleanup, and used in an assembly. We are going to start by submitting a file to Generative Design then we want to look at the results that are returned for strength, weight and even cost. We will review sorting the results to get the best possible option for what we want then we will download the file and talk about what can be done with the file. I will finish up by talking about changes to Generative Design that have come out this year.

Speaker(s)

Robert Savage is a Senior Education Specialist at IMAGINiT Technologies. He is a 30-year design veteran who has designed everything from molds and molded parts to robots. At Remotec, a division of Northrop Grumman Corporation, he spent 5 years as a lead designer in the research and development group, as well as CAD and Vault Administrator. He is an Autodesk Certified Instructor and a Certified Inventor Professional. He has used Inventor software since its inception, as well as being well-versed in a variety of other design software. He has 20 years of experience teaching 3D design software, including AutoCAD Electrical, Product Design Suite Ultimate software, Factory Design Suite Ultimate software, Simulation Moldflow software, Fusion 360, Nastran In-CAD and Vault Professional software.
Email: rsavage@rand.com

Review the Setup and Upload the file we want to use

Setting up the part to be run in generative design is a process with many segments that will very depending on what you are designing. I have broken them down into 5 catagories :

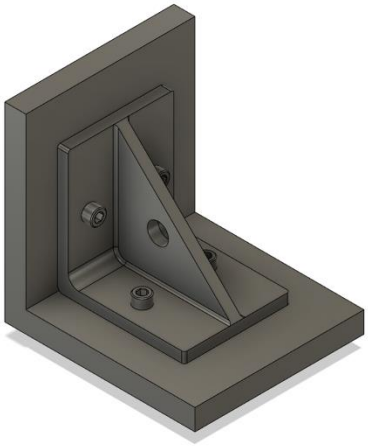

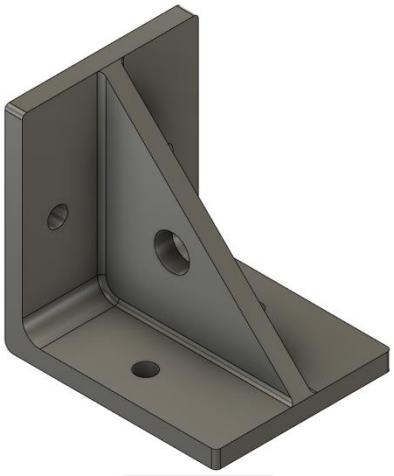

Identify the problem domain and gather information

If you have an existing model, then you have already completed this step. This would be used as a starting shape in generative design. If you do not have an existing model, then you should consider modeling some of the basic points like mounting holes and load faces. This can be completed using standard modeling techniques and I recommend that the parts be a single body, an assembly would be multiple parts, but you would want to remove any non-essential parts like fasteners, and pins.

Creating Preserve Geometry

Preserve regions are areas that we want to maintain the size and shape that we define in the model.

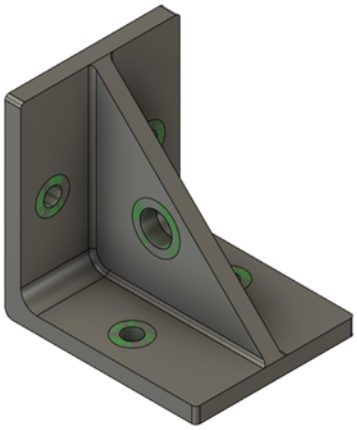

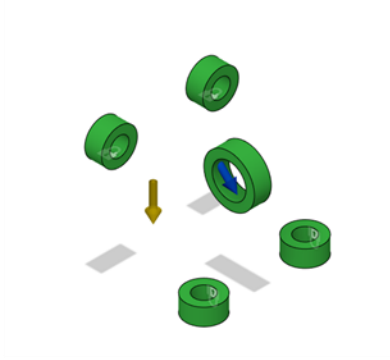

Creating Obstacle Geometry

Obstacles are areas in the design where we don't want generative design to allow materials to enter.

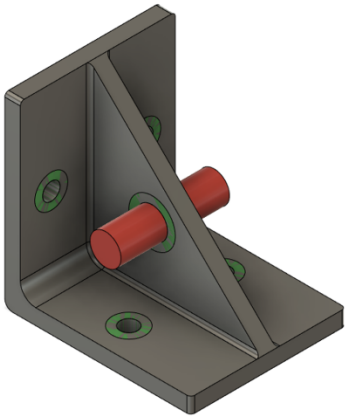

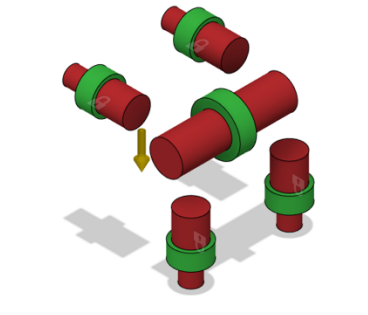

.

Setting up Boundary Conditions

These are either your constraints or the way you control the part, or loads that you apply to the part. There are also appling materials and settings on the model.

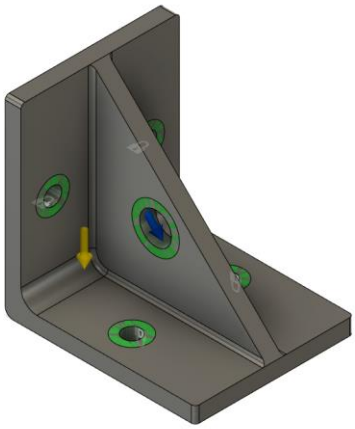

Run the Studies

At this point, run your various studies. Pay attention to early results to ensure that you're getting expected kinds of results. You'll notice fairly early on if an obstacle is too short or you forgot some specific detail.

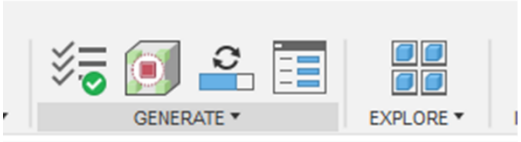

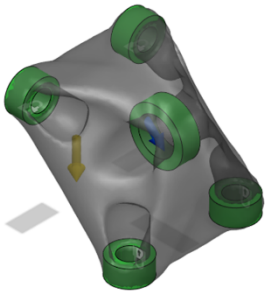

Breakdown and Sort the results of the file

The results are based on several points including Material, Safety Factor, Mass…

Examin your Results

As your results complete, use the tools available to determine which solutions are worth further investigation. This may be a matter of using the scatter plots, visually comparing results, or inspecting the model stress visualizations.

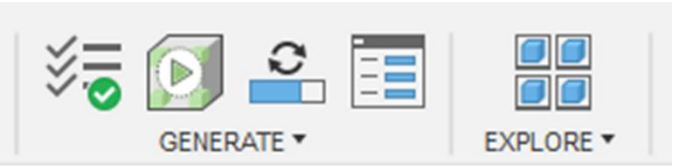

Compare results to initial expectations

Once your results are in, loop back to step one and validate what was generated against what you expected/desired.

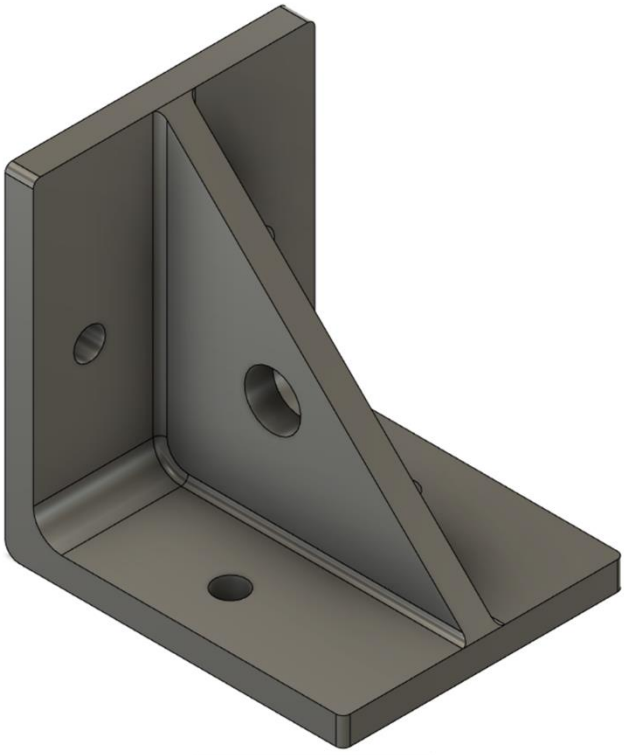

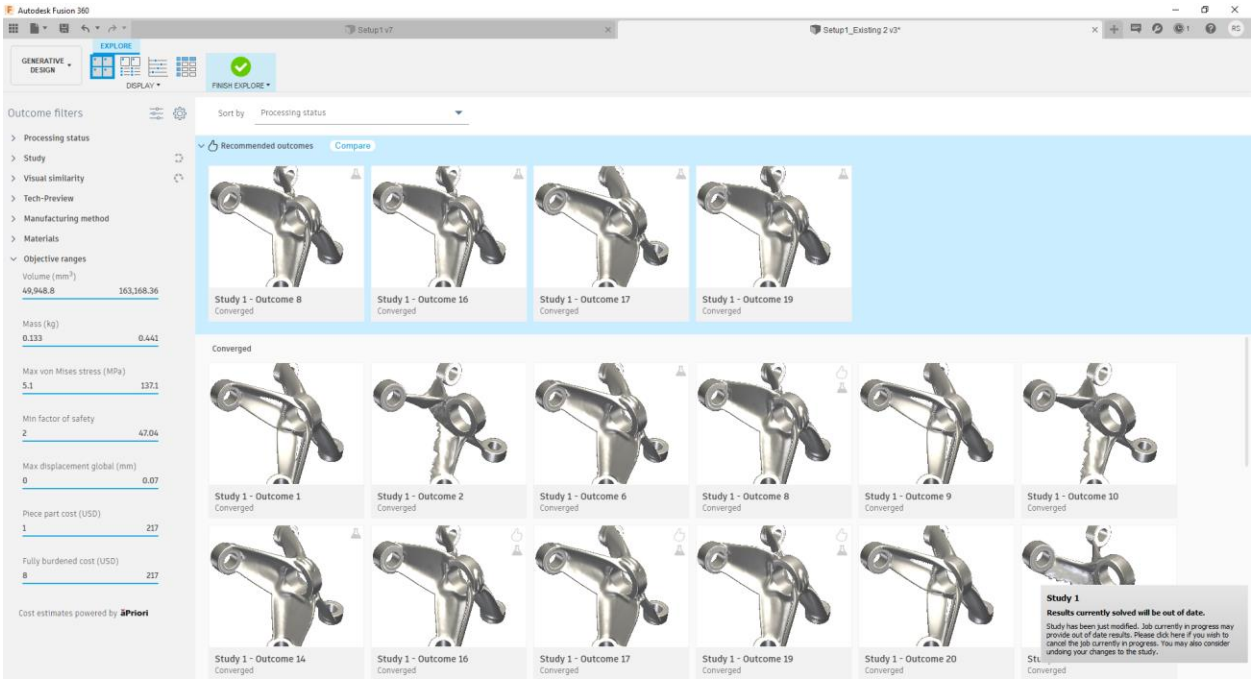

Results

The display of the results can be adjusted between Thumbnail, Properties, Scatter Plot, and Table all of which can be sorted using the dropdown menu at the top of the window.

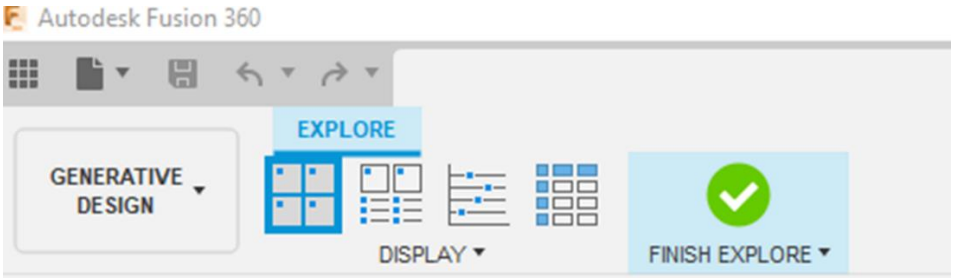

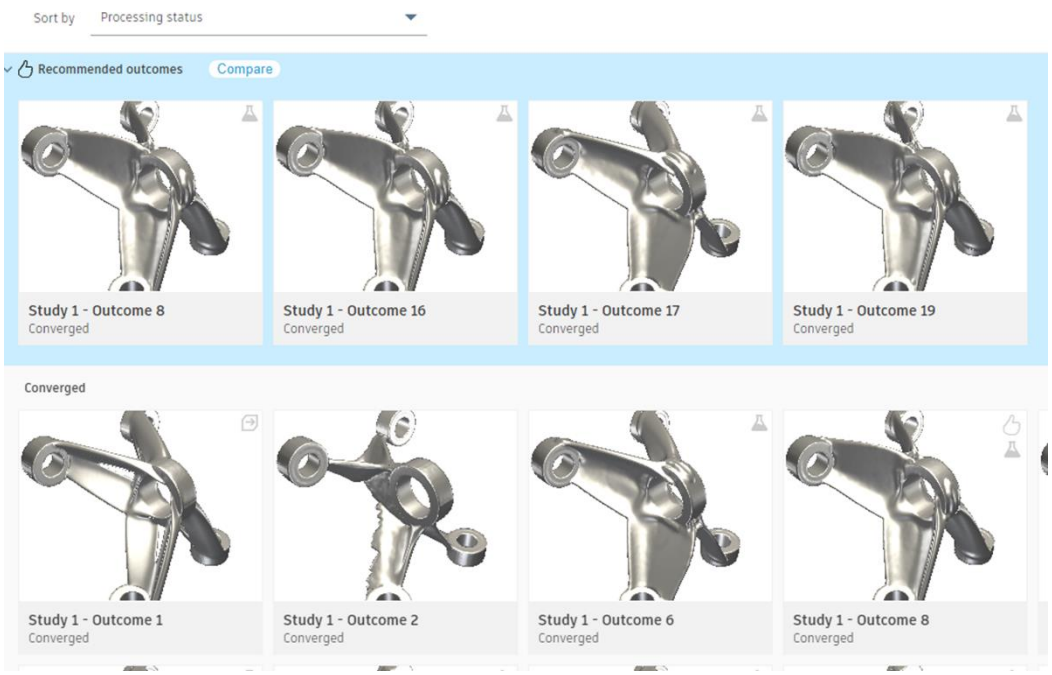

Thumbnail View

Thumbnail View

The Thumbnail View contains a sort drop down list at the top, selection boxes on each view, and outcome cards or previews of selected options.

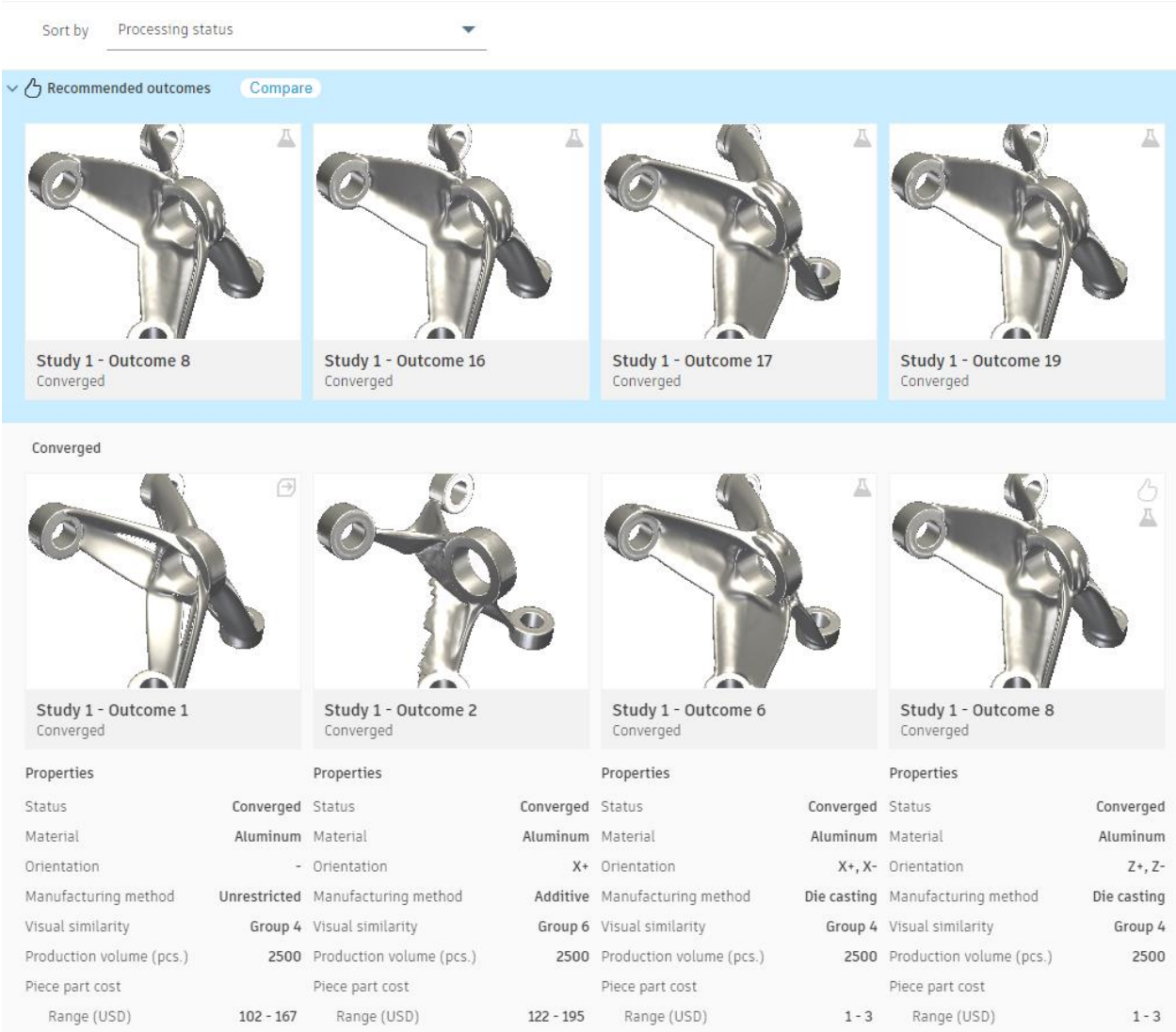

Properties View

Properties View

The PropertiesThumbnail View contains a sort drop down list at the top, selection boxes on each view, and outcome properties and outcome cards.

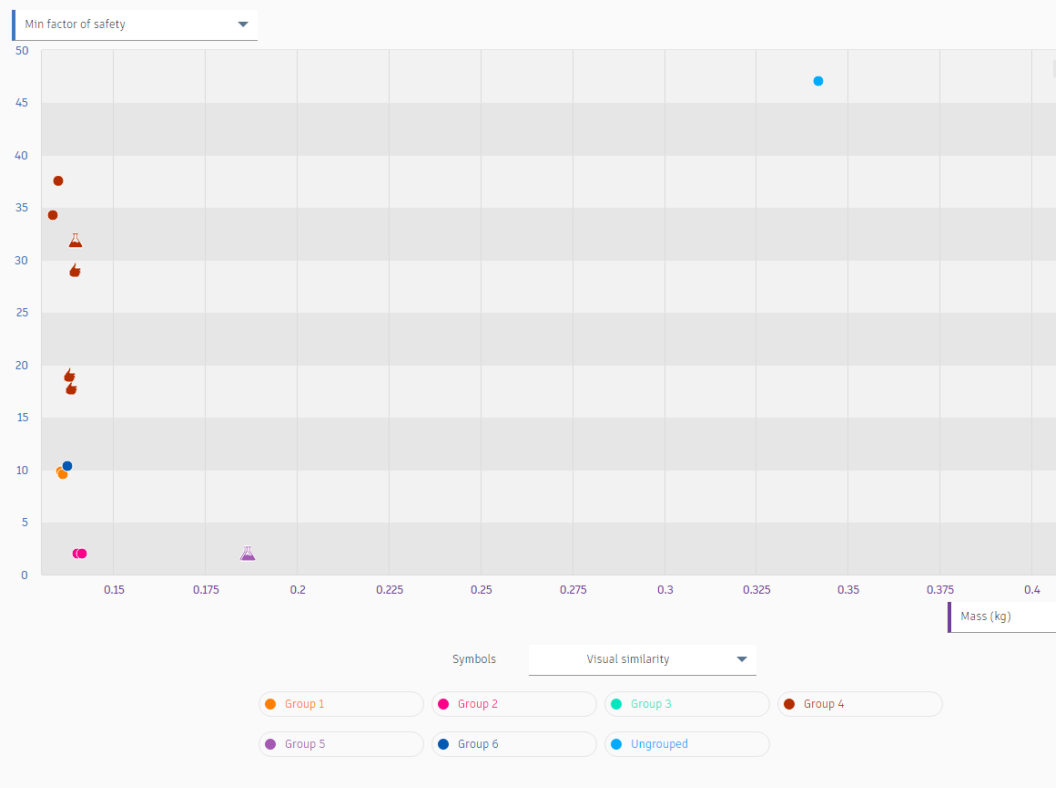

Scatter Plot View

Scatter Plot View

The Scatter Plot View contains a sort drop down list at the top and bottom, symbols list, properties pane, Dots and outcome cards.

	Name ↓	Tech-Preview	Recommendation	Processing status	Material	Manufacturing method	Visual similarity	Piece cost range (USD)	Piece cost median (USD)	Full cost range (USD)
	Study 1 - Outcome 1		91 %	Converged	Aluminum	Unrestricted	Group 4	102 - 167	143	102 - 167
	Study 1 - Outcome 2		55 %	Converged	Aluminum	Additive	Group 6	122 - 195	169	122 - 196
	Study 1 - Outcome 3		72 %	Completed	Aluminum	Additive	Group 2	127 - 208	179	127 - 209
	Study 1 - Outcome 4		60 %	Completed	Aluminum	Additive	Group 1	117 - 198	169	117 - 199
	Study 1 - Outcome 5		0 %	Completed	Aluminum	3 axis milling	Group 3	46 - 106	62	46 - 107
	Study 1 - Outcome 6		92 %	Converged	Aluminum	Die casting	Group 4	1 - 3	2	9 - 21
	Study 1 - Outcome 7		88 %	Completed	Aluminum	Die casting	Group 5	2 - 4	3	8 - 19
	Study 1 - Outcome 8		92 %	Converged	Aluminum	Die casting	Group 4	1 - 3	2	8 - 19
	Study 1 - Outcome 9		91 %	Converged	Aluminum 6061	Unrestricted	Group 4	102 - 167	143	102 - 167
	Study 1 - Outcome 10		55 %	Converged	Aluminum 6061	Additive	Group 6	122 - 195	169	122 - 196
	Study 1 - Outcome 11		72 %	Completed	Aluminum 6061	Additive	Group 2	127 - 208	179	127 - 209
	Study 1 - Outcome 12		60 %	Completed	Aluminum 6061	Additive	Group 1	117 - 198	169	117 - 199
	Study 1 - Outcome 13		0 %	Completed	Aluminum 6061	3 axis milling	Group 3	46 - 106	62	46 - 107
	Study 1 - Outcome 14		92 %	Converged	Aluminum 6061	Die casting	Group 4	1 - 3	2	9 - 21
	Study 1 - Outcome 15		88 %	Completed	Aluminum 6061	Die casting	Group 5	2 - 4	3	8 - 19
	Study 1 - Outcome 16		92 %	Converged	Aluminum 6061	Die casting	Group 4	1 - 3	2	8 - 19
	Study 1 - Outcome 17		92 %	Converged	Aluminum A356 T6	Die casting	Group 4	1 - 3	2	9 - 21

Table View

Table View

The Table View contains column header, outcome image, rowes and outcome cards.

Downloading the file, we want to use

Once you've generated a result that you're satisfied with, export it as a BRep/TSpline and place it back into the base model to inspect the context again. Begin thinking about next steps with regards to CAM, 3D printing, CAE validation, etc. Add in required features like machining operations or modify the TSpline as needed to achieve your contextual requirements.

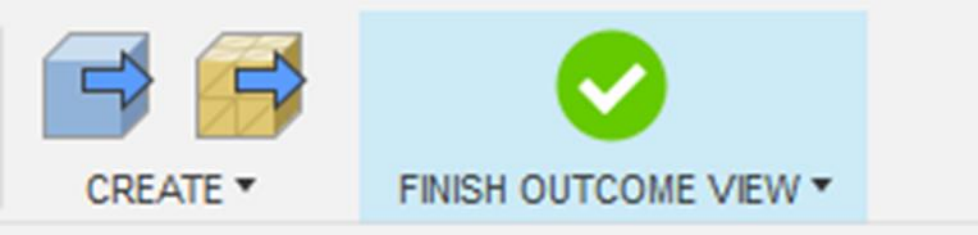

Solids Option

This will create a a file that can be modified and used in an assembly.

Mesh Option

This will create a a file that can be modified and use to create a 3D Print.

Modify and use the file in an Assembly

Now that you have your part downloaded lets see what we can do with them.

Modify the Part

Once you've generated a result that you're satisfied with, export it as a BRep/TSpline and place it back into the base model to inspect the context again. Begin thinking about next steps with regards to CAM, 3D printing, CAE validation, etc. Add in required features like machining operations or modify the TSpline as needed to achieve your contextual requirements.

Use in an Assembly

Since this comes in as a solid you can constrain this to other parts.