MFG220676

Automatic PDF Creation for Drawings in Vault Professional Based on a Custom Workflow

Shaya Ghanbar

Manufacturing Technical Consultant, SolidCAD

Your AU Presenter

Shaya currently resides in Toronto, ON, Canada with his wife and daughter. As a Mechanical Engineer, Shaya has several years of experience in mechanical component design in the automotive industry and knowledge in design and simulation of advance remote medical equipment. Shaya has used several CAD and FEA applications such as Autodesk Inventor, ANSYS and Pro Engineer for 2D/3D design and simulation analysis. Currently, Shaya is working as a Manufacturing Technical Consultant with SolidCAD. He is taking advantage of his engineering and CAD design experience to help SolidCAD's clients to improve their manufacturing processes and determine methods for time and cost management.

Class Overview

What are we going to do in this class?

Class Overview

AUTODESK® VAULT

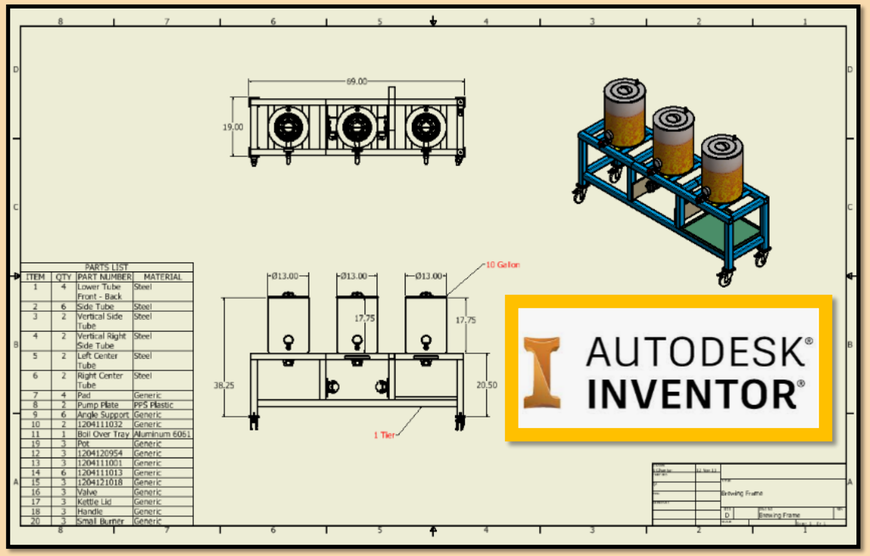

IDW & DWG

DWG

PDF Drawings

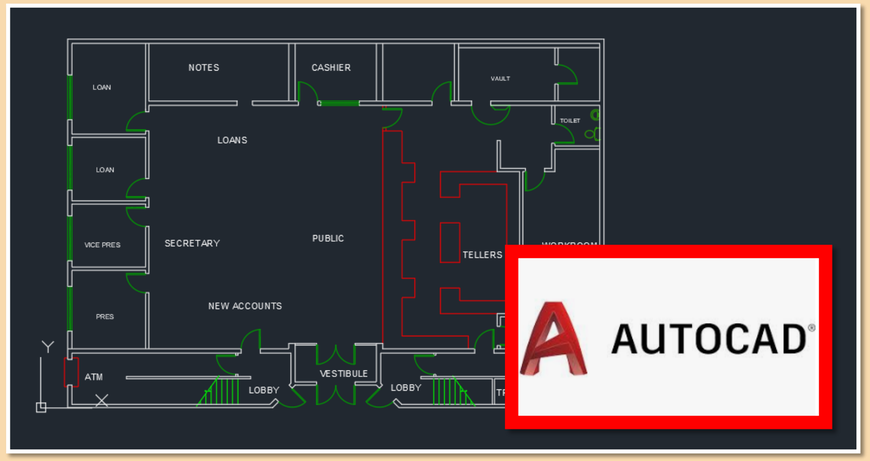

PDF Creation Workflow

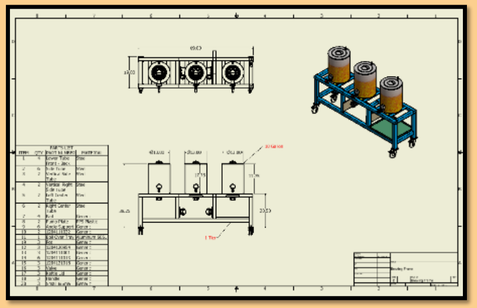

Work in Progress

Released

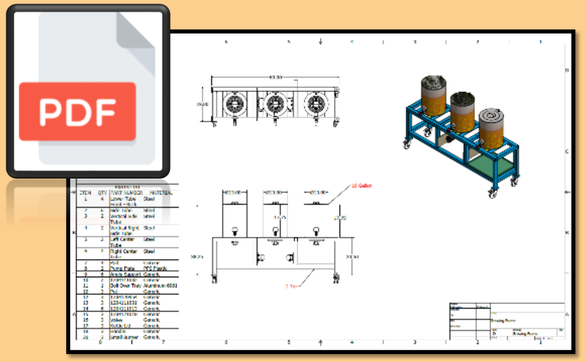

Released

WHY DO WE NEED TO THINK ABOUT AUTOMATING PDF CREATION?

Because:

- Manual conversion of IDW and DWG files to PDF = **Time consuming**
- Searching to find the latest version of PDF drawings = **Time consuming**
- PDF files need to be manually checked back into Vault = **Time consuming**
- Manually created PDFs can be saved in a wrong location = **Human error = time loss**

Time = $$$

TOPICS OF DISCUSSION

- Demo:
  - Creating of a customized lifecycle, workflow, rule and category for PDF generation.
  - Learning how to set up Vault Pro to automatically create PDFs based on a workflow.
- Understanding the Job Server functionalities for automatic PDF creation and beyond.
- Pros and cons of Vault Pro automatic PDF creation.
- Q&A .

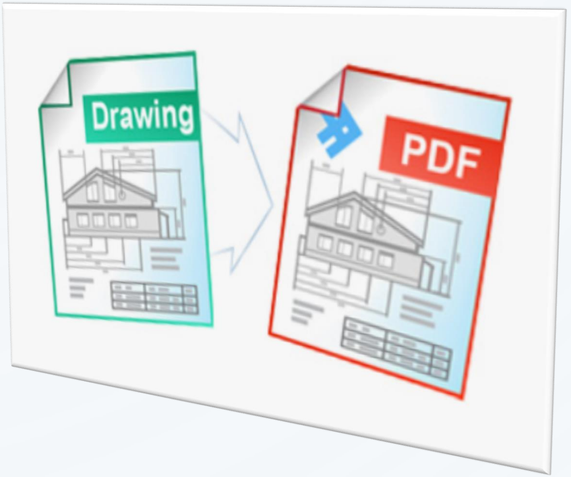

Demo

This demo will only cover the major steps required to create a customized workflow for the purpose of automatic PDF creation.

For detailed step-by-step instructions, please refer to the handout document.

Demo

Step 1: Setup and Configuration for a New Install of Vault 2018 or a Newer Version:

A fresh installation of Vault Pro 2018 comes with an out-of-the-box PDF creation workflow. Since the out-of-the-box solution is not customized to meet every organization's unique requirements, the out-of-the-box category **(Design Representation)** and rule **(Design Representation)** need to be disabled.

Demo

Step 1: Setup and Configuration for a New Install of Vault 2018 or a Newer Version

https://autode.sk/2RSaTDA

Demo

Step 2: Lifecycle Definition Creation and Configuration:

A lifecycle is a powerful and flexible method for managing file access and revision control. Lifecycle configuration is the first step to creating a customized workflow. Defining and configuring a lifecycle includes the following tasks:

- Creation of a new lifecycle definition **(PDF)**.
- Assigning lifecycle states.
- Configuring ‘Control’.
- Setting up user security.
- Transitions between states.

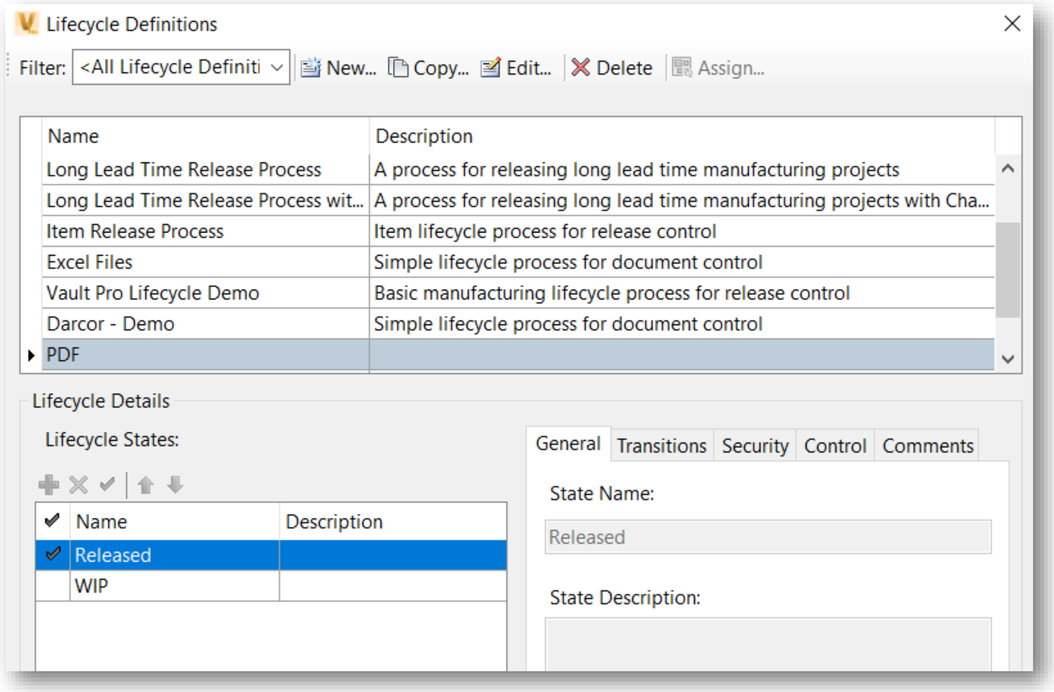

Demo

Step 3: Category Creation and Configuration:

A file category defines the associated lifecycle, revision and file properties. Creating a customized category requires the following tasks:

- Creating a new category **(PDF)**.
- Assigning a lifecycle to the category.
- Assigning a revision scheme to the category.

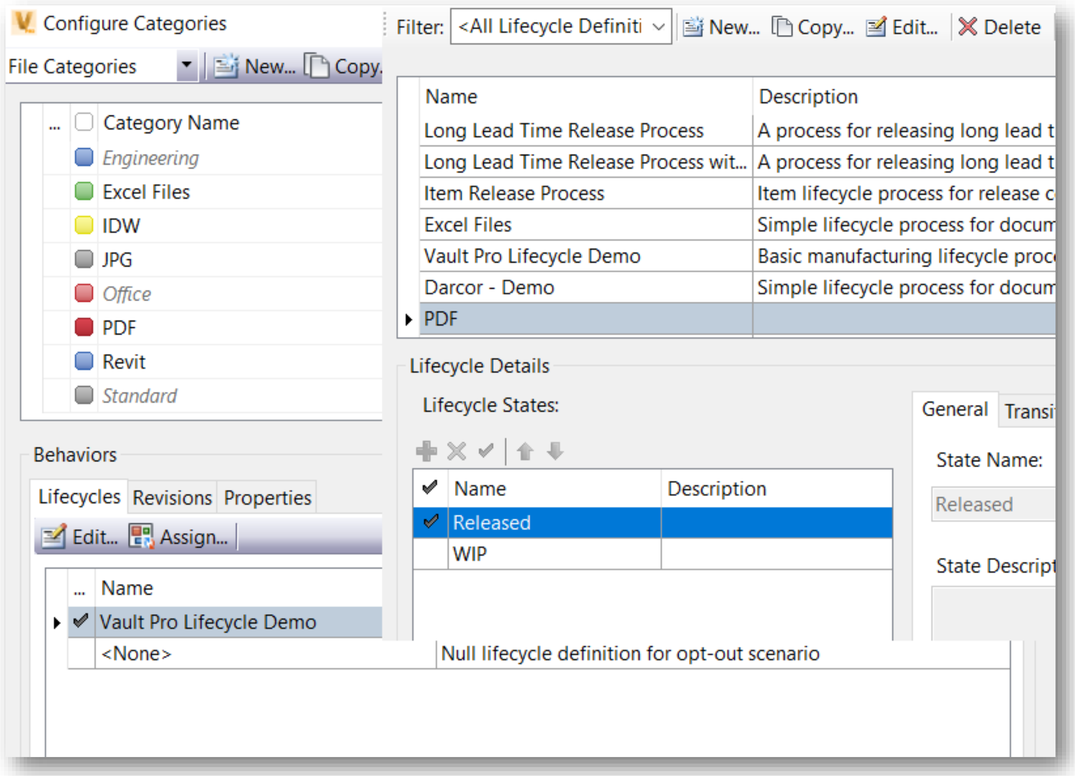

Demo

Step 3: Category Creation and Configuration

https://autode.sk/2DB8HwY

Demo

Step 4: Rule Creation and Configuration:

A rule associates a file to a category based on the file's metadata properties or file extension. In the case of automatic PDF creation, the **PDF rule** associates .pdf file extension with the **PDF category**. The following tasks are required to create a customized category:

- Creating a new rule **(PDF)**.
- Adding conditions to the rule.

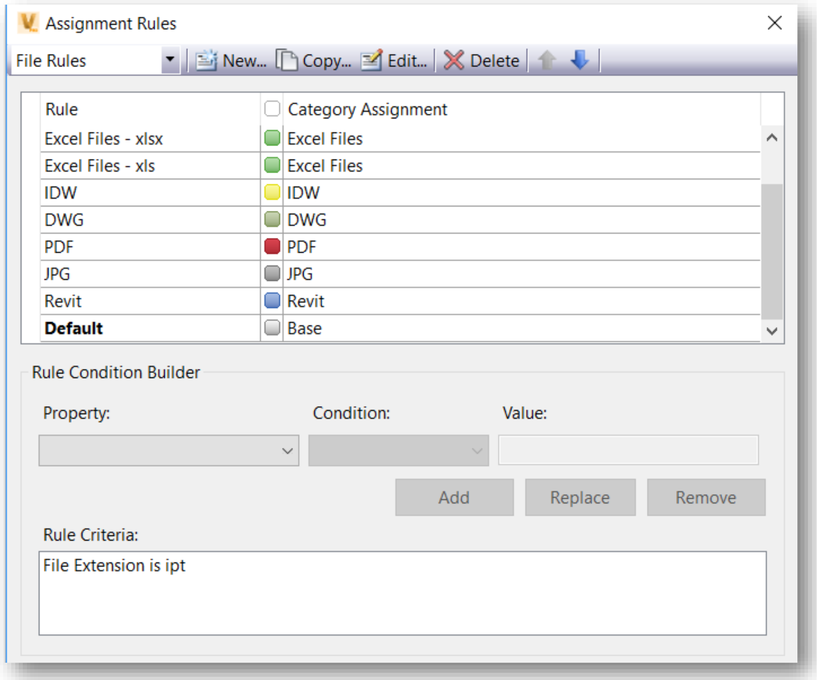

Demo

Step 4: Rule Creation and Configuration

https://autode.sk/2OGdZbx

Job Server Functionalities

Job Server is a feature of Vault Professional and is designed to perform batch-processing operations. In addition to the standard functionality that Job Server provides (DWF creation, property synchronization and PDF conversion), Job Server can be configured to perform custom actions on lifecycle state changes. Tasks are performed by a “Job Processor” which is a workstation-based application. Any workstation with Vault Pro client and Inventor installation can be leveraged as a Job Processor.

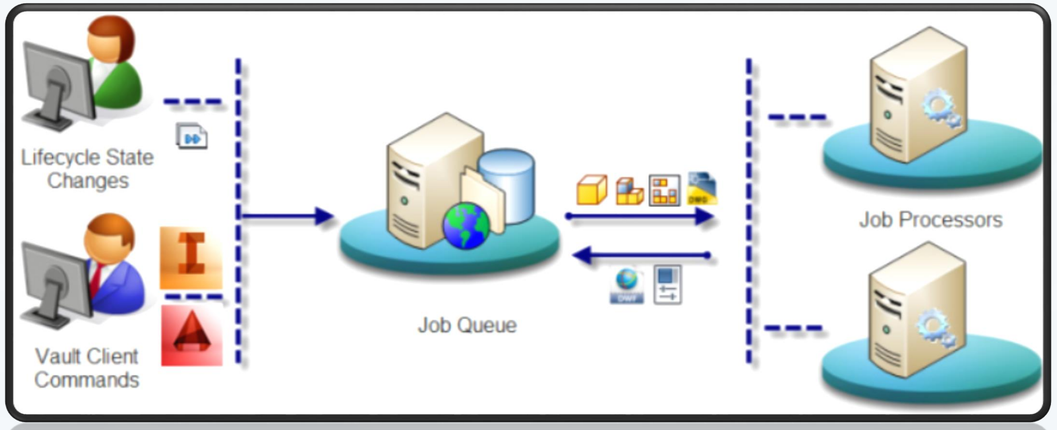

SolidCAD’s Custom Automation with the Help of Job Server

SolidCAD
A Cansel Company

Demo

Step 5: Job Server Configuration:

In order to use the functionalities of the Job Server, the Job Server needs to be enabled by the Vault administrator.

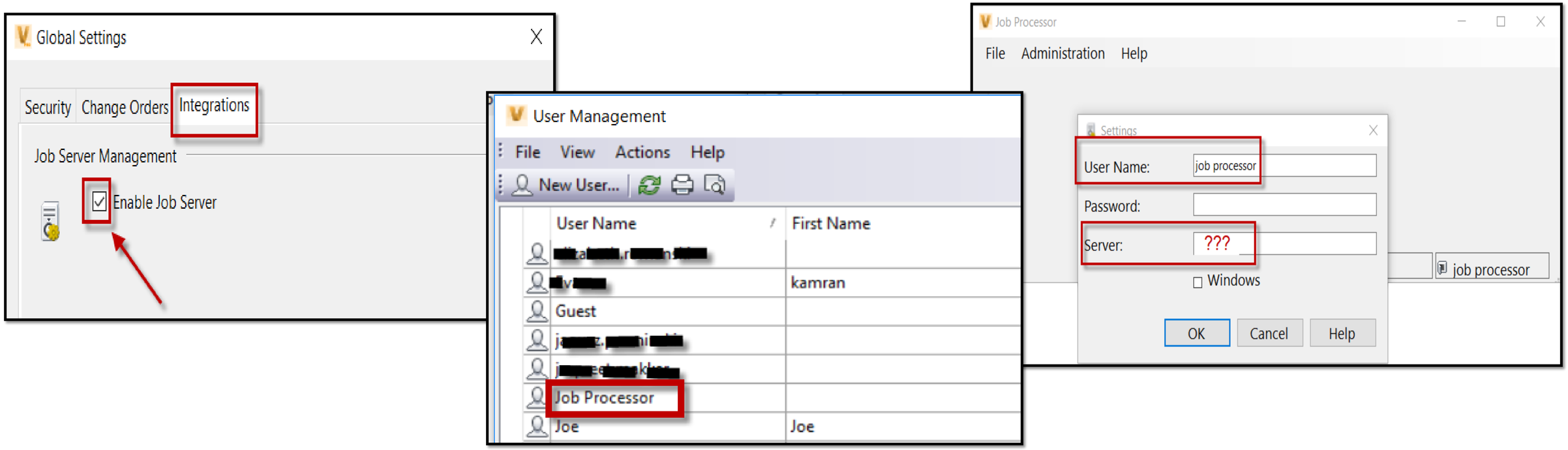

Demo

Step 6: Necessary Changes to the Source Drawing File's Lifecycle:

The **Released** state of the source drawing file is going to be utilized to trigger the PDF creation. The trigger or so called Synchronization needs to be selected in the source file's transition to released state.

In addition, the **Job Processor** user needs to be added to source file's lifecycle.

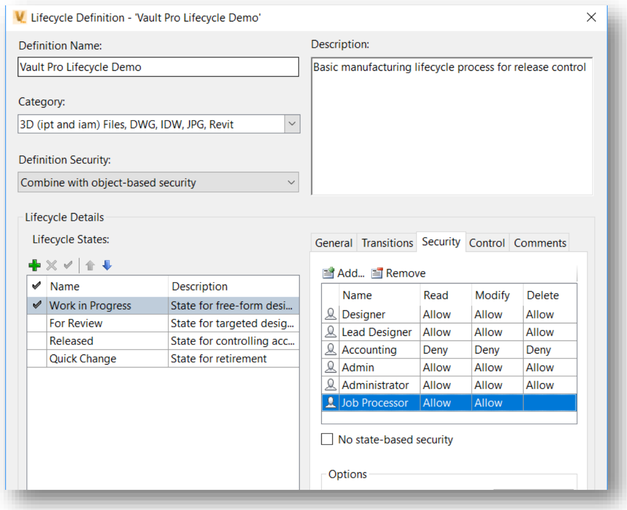

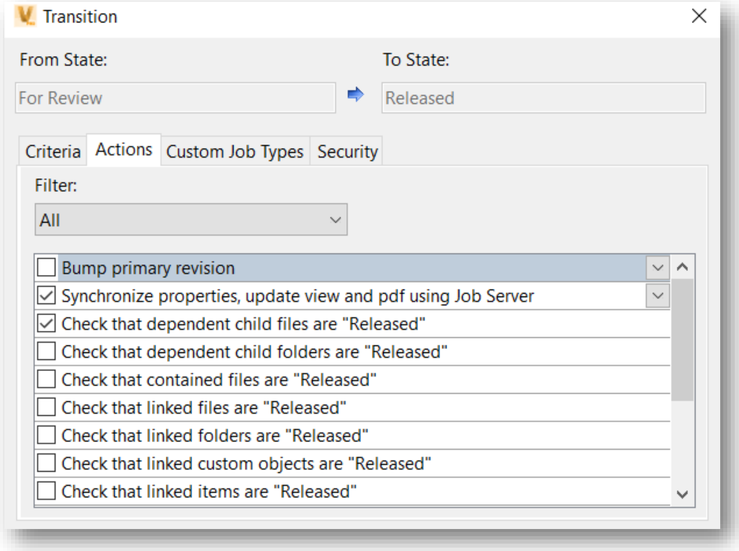

Job Server Functionalities

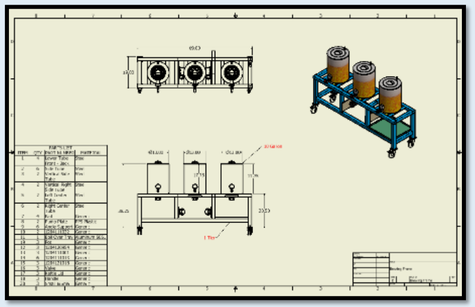

Work in Progress

Released

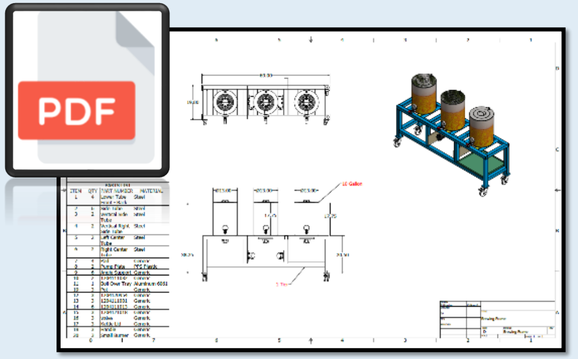

Released

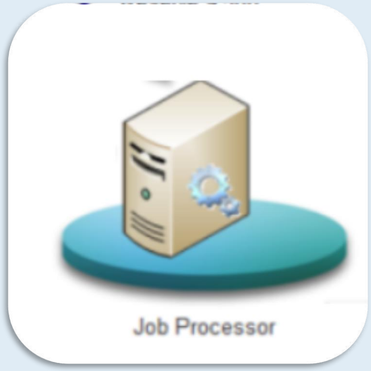

Automatic Drawing Conversion to PDF

https://autode.sk/2zFAsAa

Pros and cons of Vault Pro Automatic PDF Creation

Below is an evaluation of Autodesk Vault Pro's PDF creation feature. This evaluation will help you decided if this feature is suitable for your business needs:

- **Pros:**
  - Time savings: no more manual conversion of drawing files to PDF.
  - Accurate naming convention: automatically created PDF files inherit the source drawing file name.
  - Accurate location: PDF files will be automatically saved in either the same location as the source drawing file or in a single designated location based on the user's preferences.

- **Cons:**
  - File name: there is a limitation on how customized the PDF name can be. Customization to the PDF file name requires advanced Vault knowledge.
  - File location: PDF files cannot be automatically saved in a subfolder of a project.
  - Lifecycle definition: as of Vault Pro 2019.1, the state of the PDF lifecycle definition does not change in accordance with source drawing file's state. As a result, users need to manually change the state of their automatically created PDF file.

Class Overview

What did we learn today?

- How create a workflow to automatically convert drawings to PDF in Vault Pro.
- Functionalities of the Job Server.
- Capabilities of the Job Server.

And more importantly how to save time and improve our process workflow!

EXPERT HELP IS HERE

Get help for training, software development, customization, and more.

SolidCAD
is an approved provider on the
Autodesk Services Marketplace

servicesmarketplace.autodesk.com/provider/public/solidcad

AUTODESK SERVICES MARKETPLACE

SolidCAD A Cansel Company

Q&A

Thank you for attending my session!

Please refer to the Handout for more detailed step-by-step instructions.

Please feel free to stop by and visit us **@ Booth: #B924 Section: Fabrication & Construction**).

AUTODESK. UNIVERSITY