Design for Consumer Level 3D Printing

Gian Pablo Villamil
Product Manager, 123D
gian.villamil@autodesk.com

Agenda

- Introduction
- Goals
- How cheap 3D printers work
- Constraints and design tips
- Printing tips
- Tools

Introduction

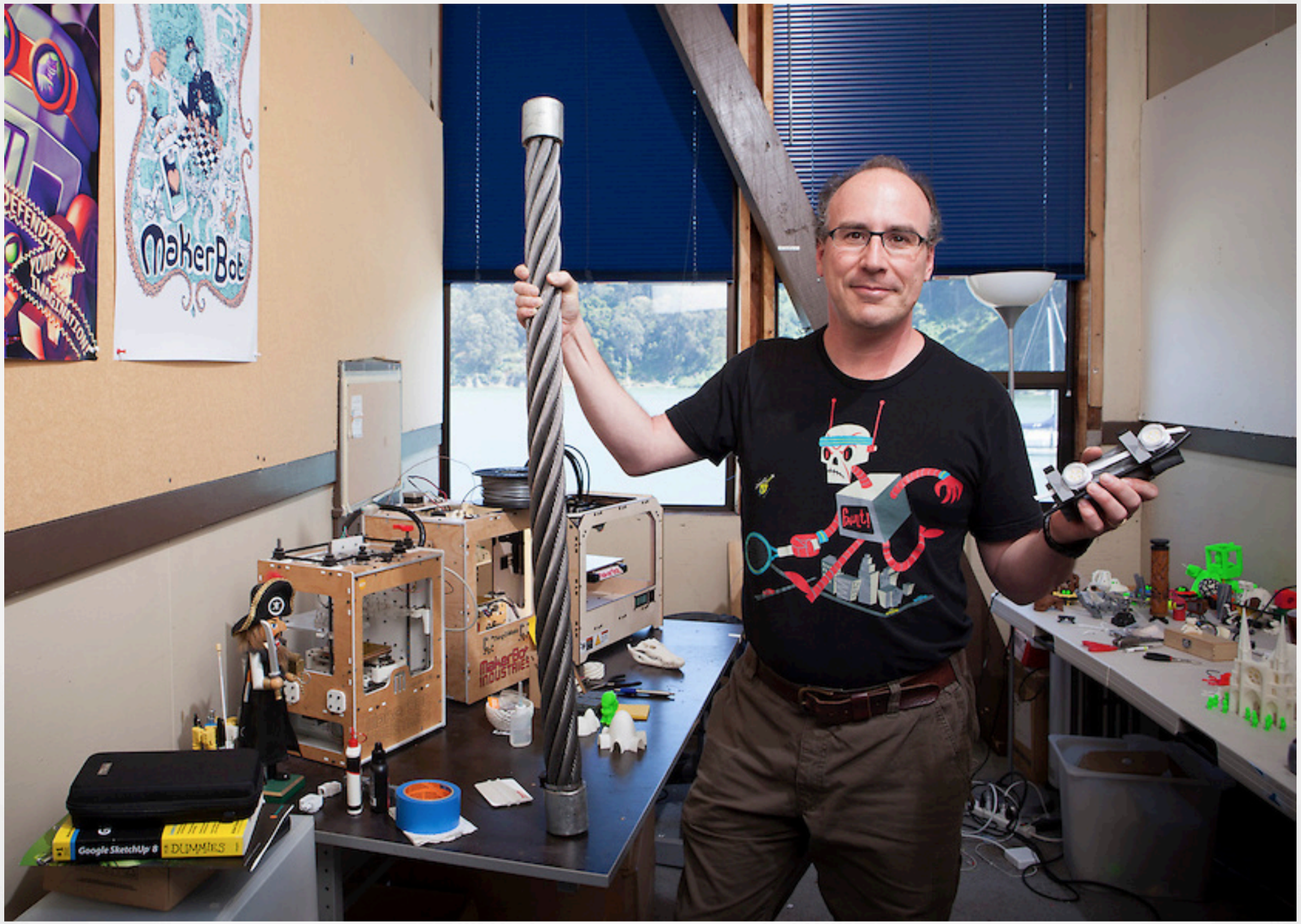

Goals

- Learn how to design parts that print well on inexpensive 3D printers:
  - Stronger
  - More attractive
  - Quick to print
  - Reduced post-processing
- Learn about tools to help with 3D printing

AUTODESK.

Background

- 3D printing is not new
- Before, transparent design rules to support prototyping
- Now, reduction in cost means fabrication is main use case
- Consumer/hobby printers have have strong constraints, and impose design rules for successful fabrication

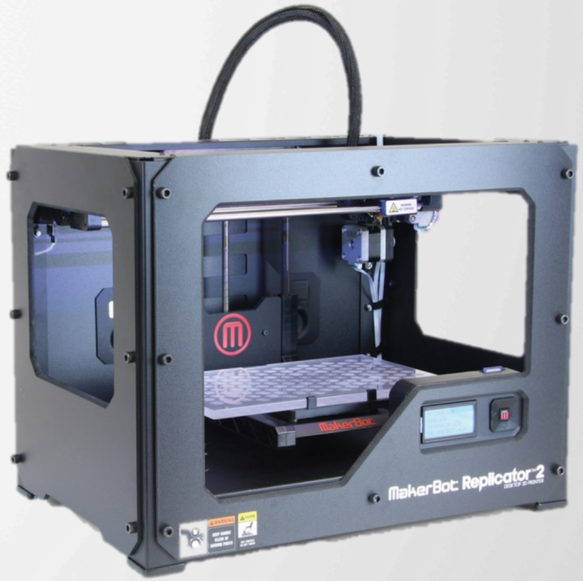

How cheap 3D printers work

- Software
- Fused Filament Fabrication

3D printer control software

- Convert model to toolpath
- Key interface between your design intent and the printer
- Many key parameters are embedded in this software
  - Layer width
  - Layer height
  - Support generation
  - Speed
- Quality of meshes impacts the software

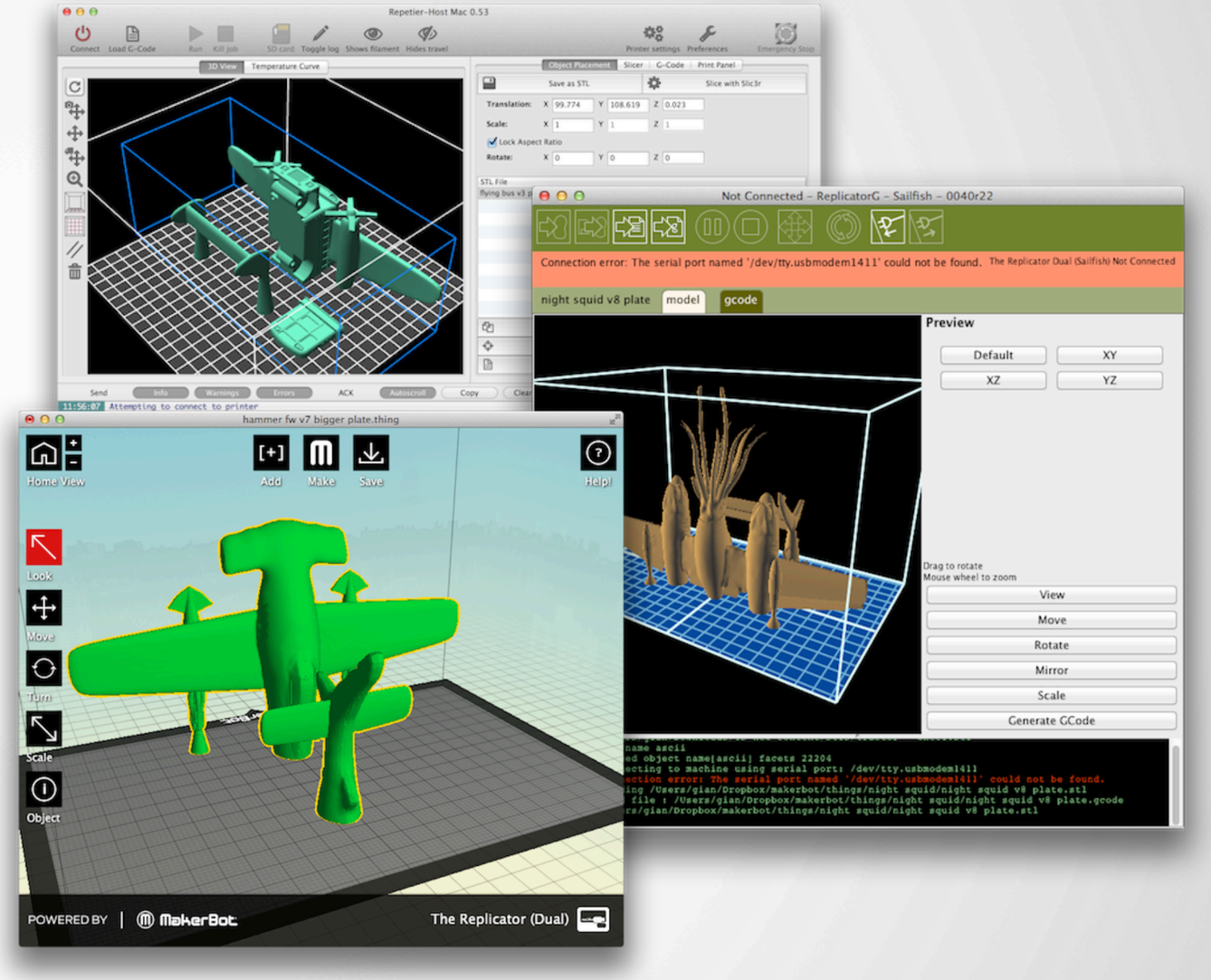

AUTODESK.

How fused filament fabrication works (1)

- Plastic filament is heated until it softens, and extruded through an extruder nozzle, which moves in X, Y and Z.
- The first layer is in contact with the build platform
- Subsequent layers are laid down on top of previous ones

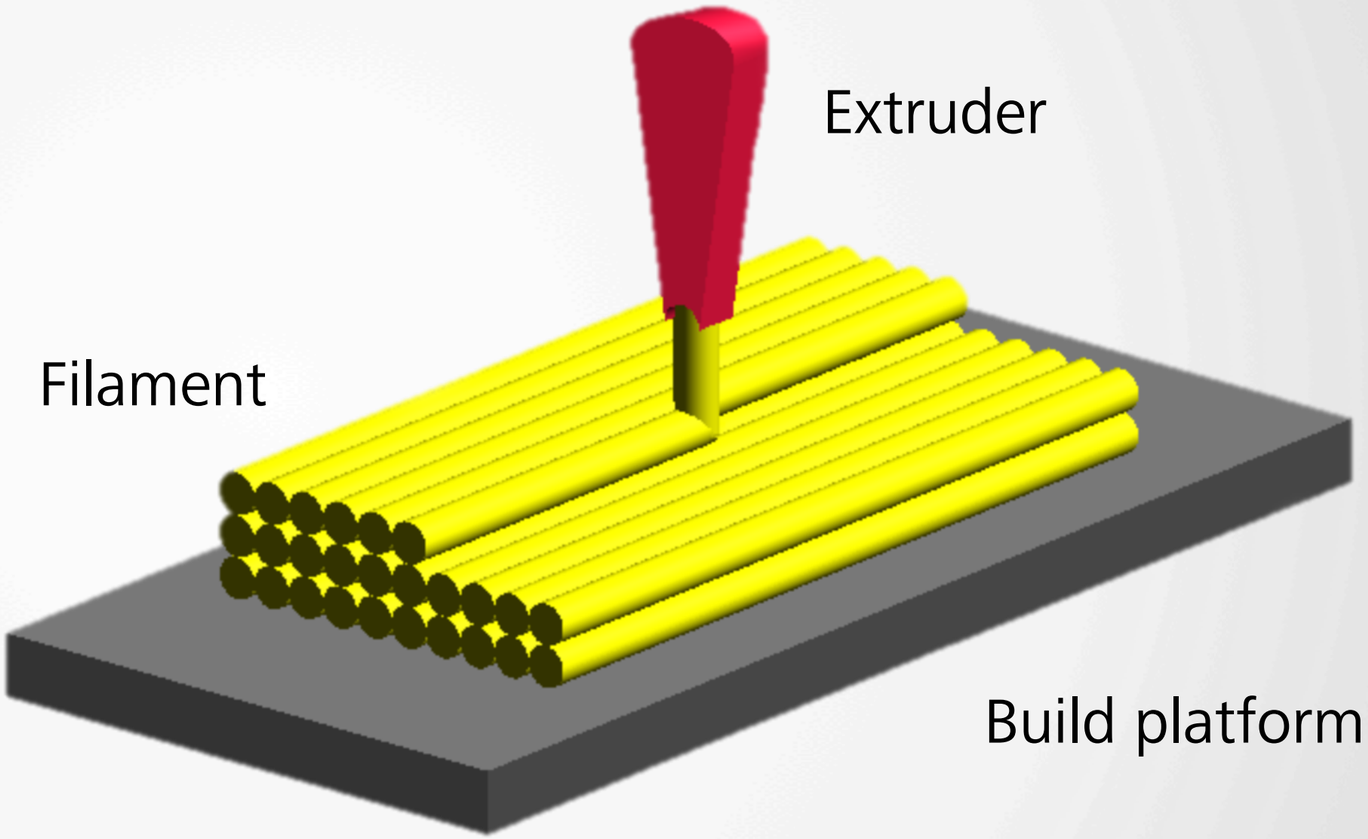

How fused filament fabrication works (2)

- Software calculates how much input filament leads to an output based on a mathematical model
- The model is not entirely accurate!
- Taking this into account is key for good results.

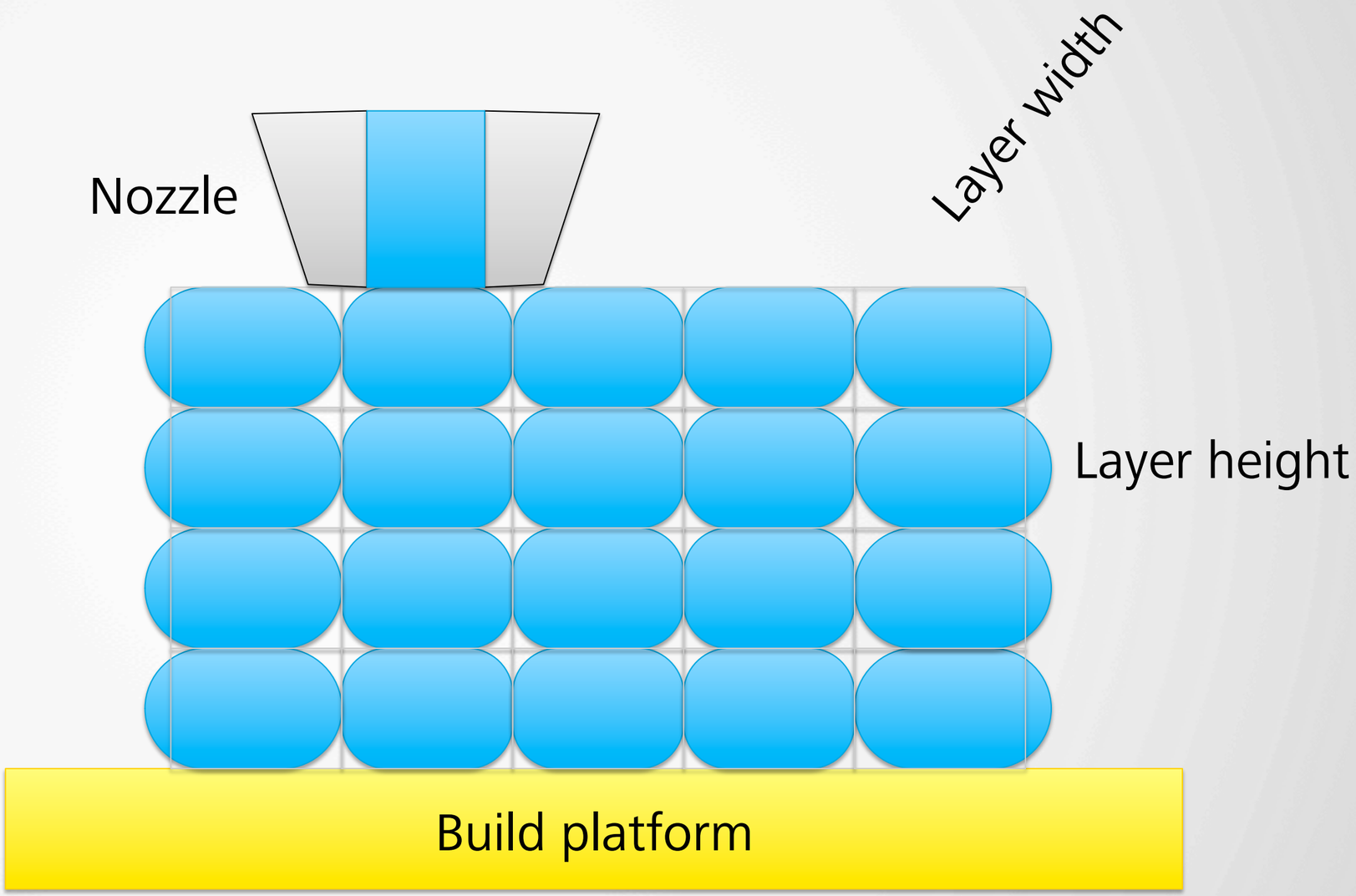

Constraints and design tips

- Allow for tolerances
- Make walls thick
- Avoid overhangs
- Manage disconnected overhangs
- Make user of bridging
- Ensure flat base
- Use strong dimension of the print
- Divide into multiple parts
- Minimize support
- When to use raft
- Make good meshes
- Repair meshes

AUTODESK.

Allow for tolerances

- Ensure that you are leaving gaps between moving parts
- Isolate key parts with tight tolerances
- 0.5mm for free motion, 0.25mm for friction fit
- Test and calibrate!

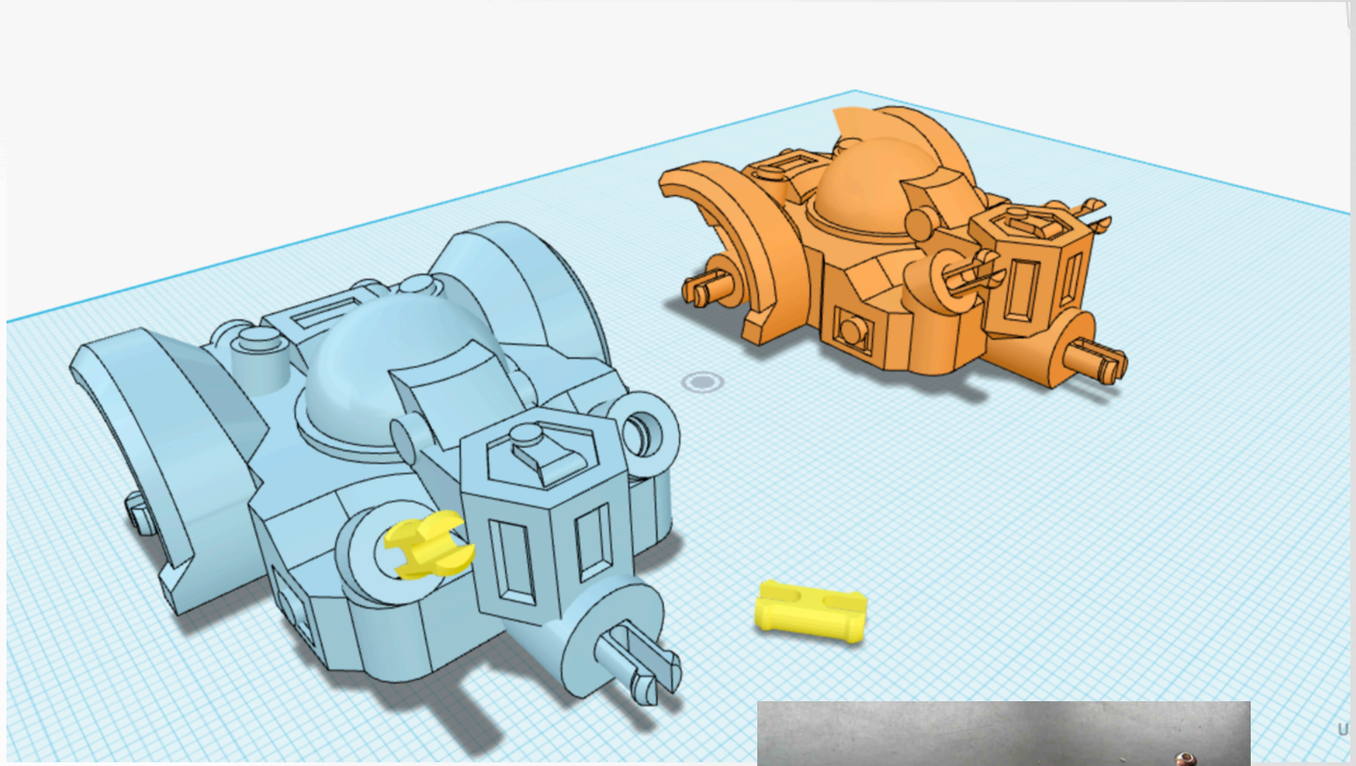

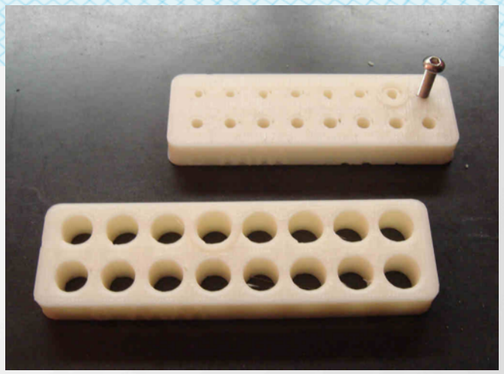

Make walls thick

- Make narrow walls an exact even multiple of layer width, if this is less than # of shells
- Avoid the dreaded “double wall” problem
- Get the layer width from slicer parameters

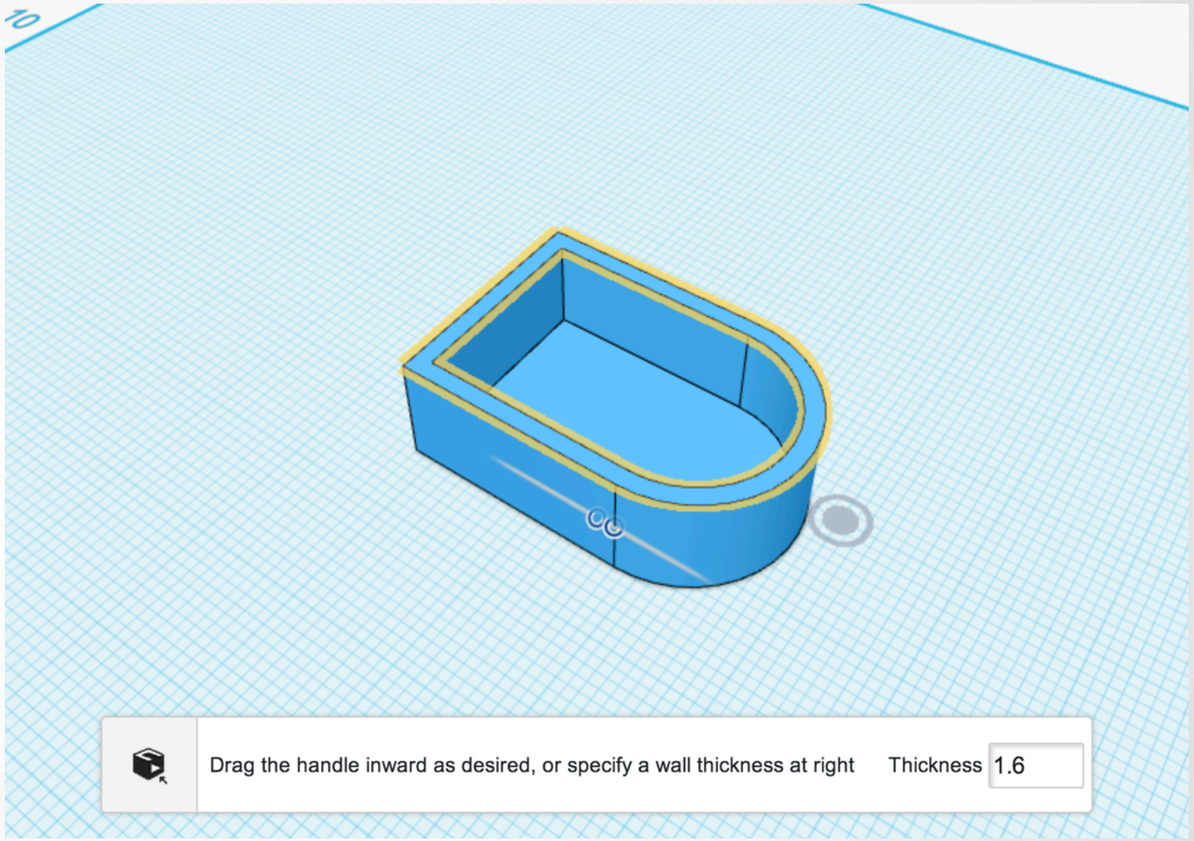

Avoid overhangs

- Keep unsupported overhangs to 45 degrees or less off the vertical
- Exception: if they are narrow salients, overhangs of up to 70 degrees are possible
- Of course, support is available – but use it intelligently!

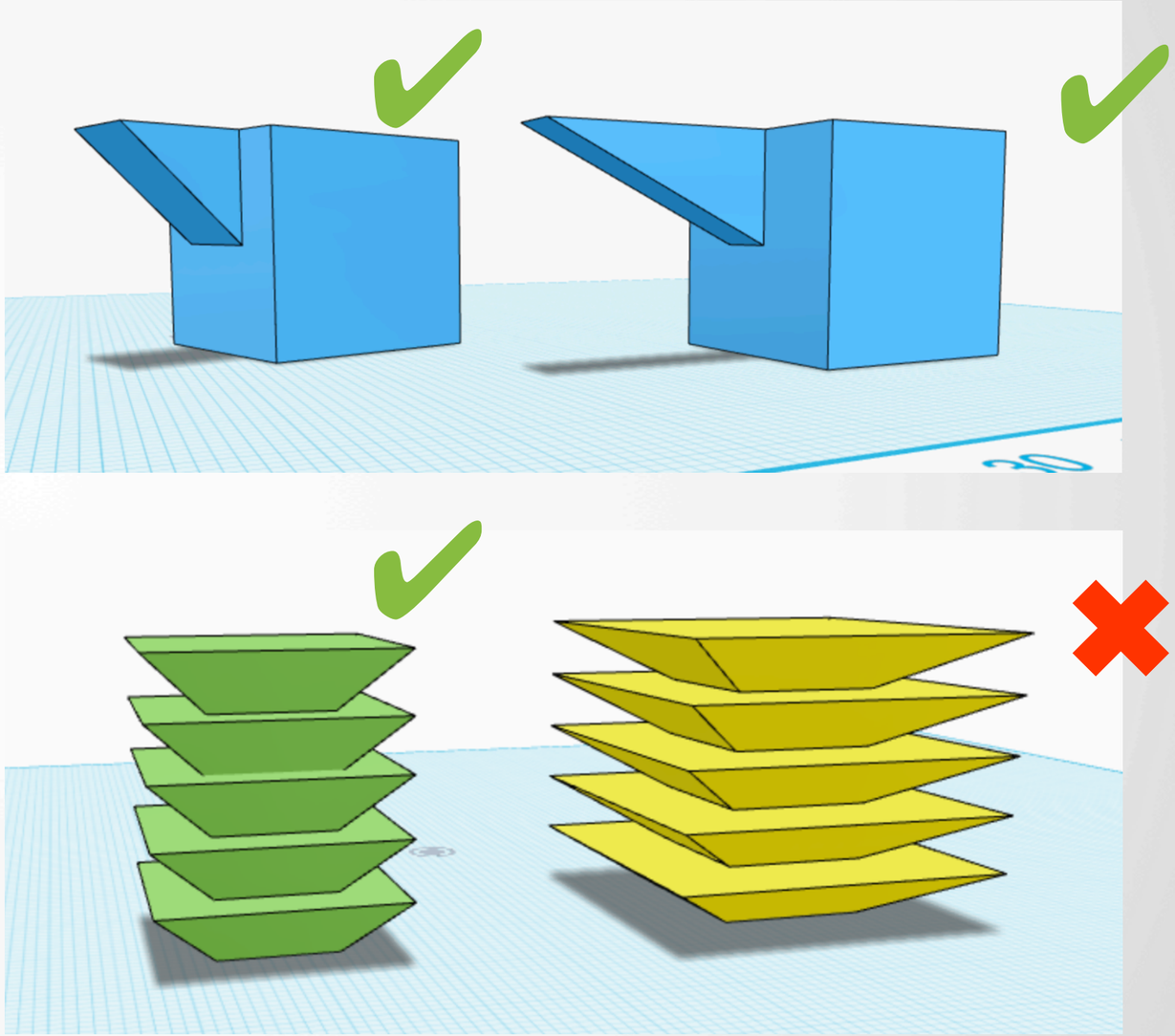

Manage disconnected overhangs

- If possible, make sure that overhangs are connected to main object, even when using support
- Use “helpers” to stabilize disconnected overhangs

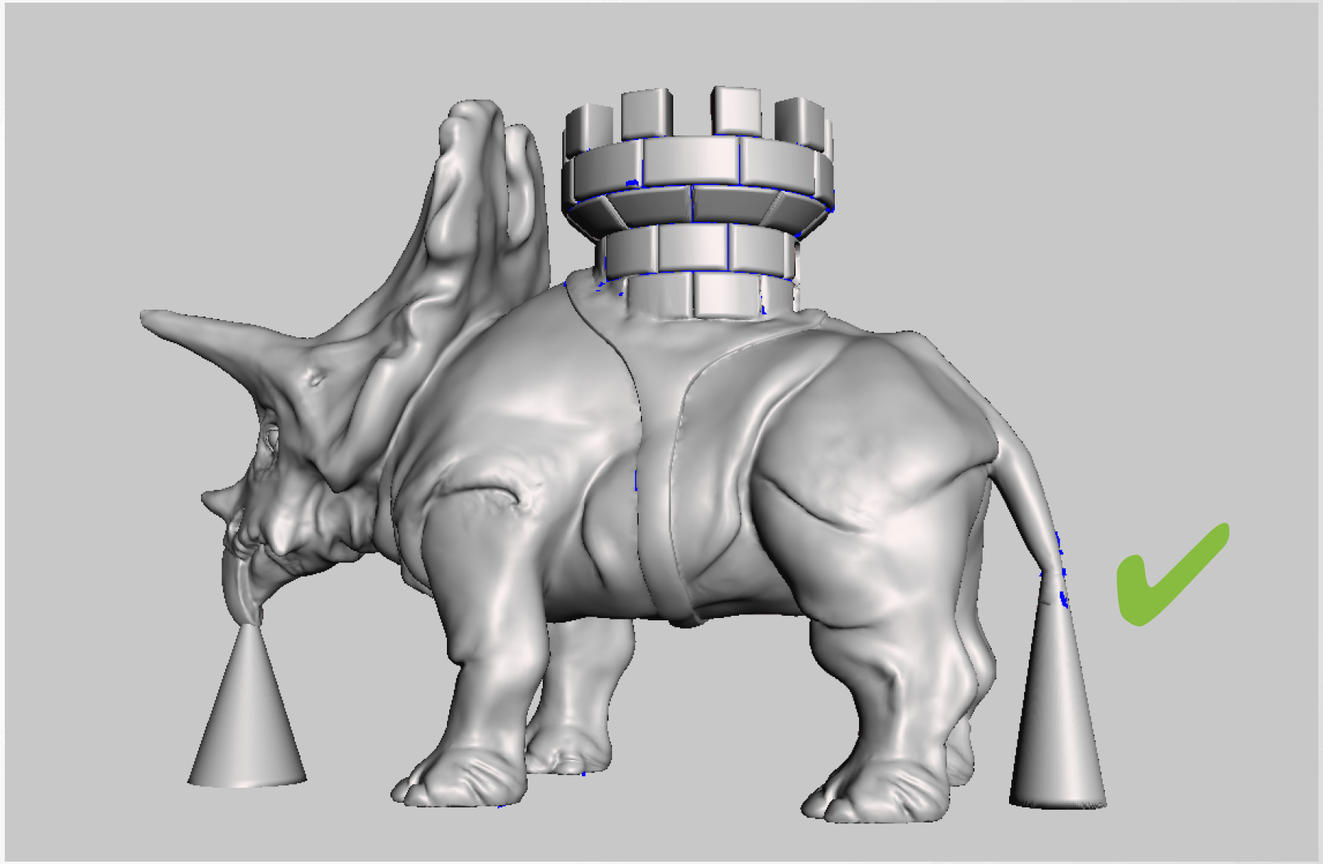

Make use of bridging

- Level spans anchored at both ends can be bridged without support
- Make sure that unsupported spans are flat to allow bridging to work

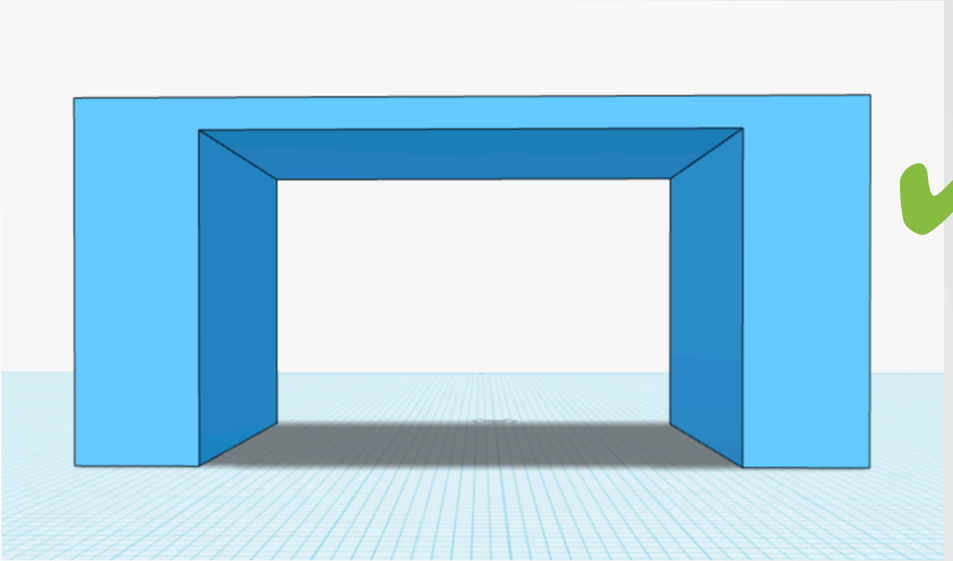

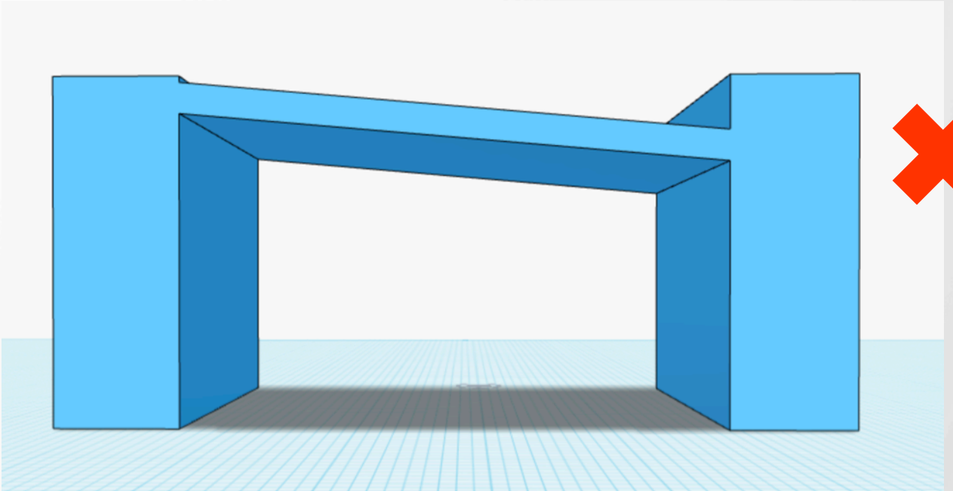

Ensure flat base

- Always provide a flat area of contact with the build platform
- Anchors the work piece and keeps it stable
- Even subtle raised features will cause problems

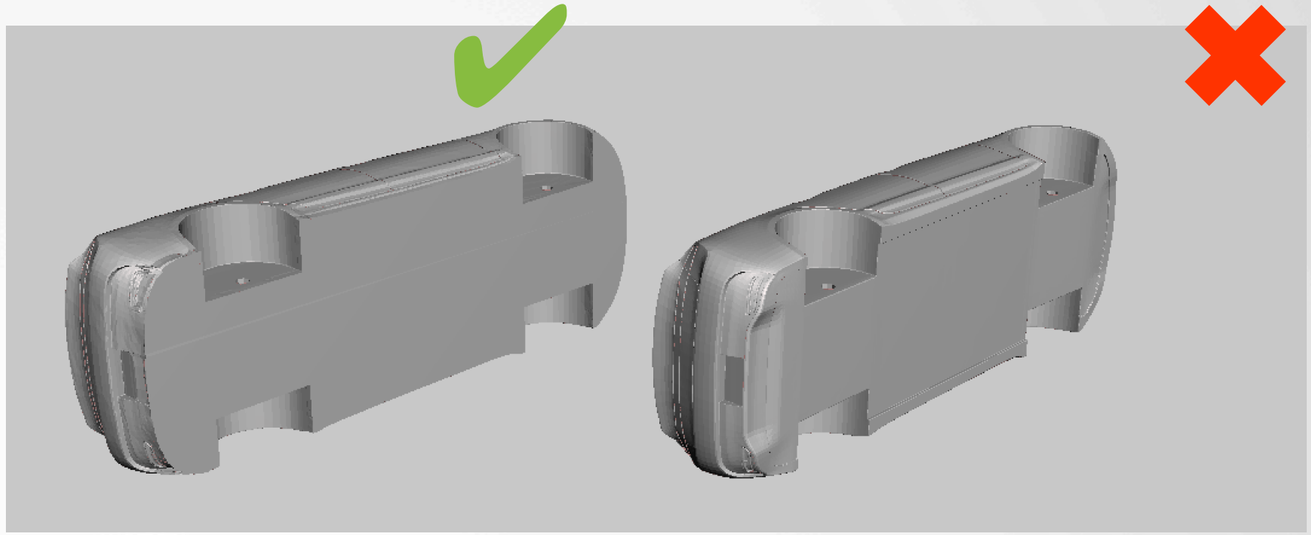

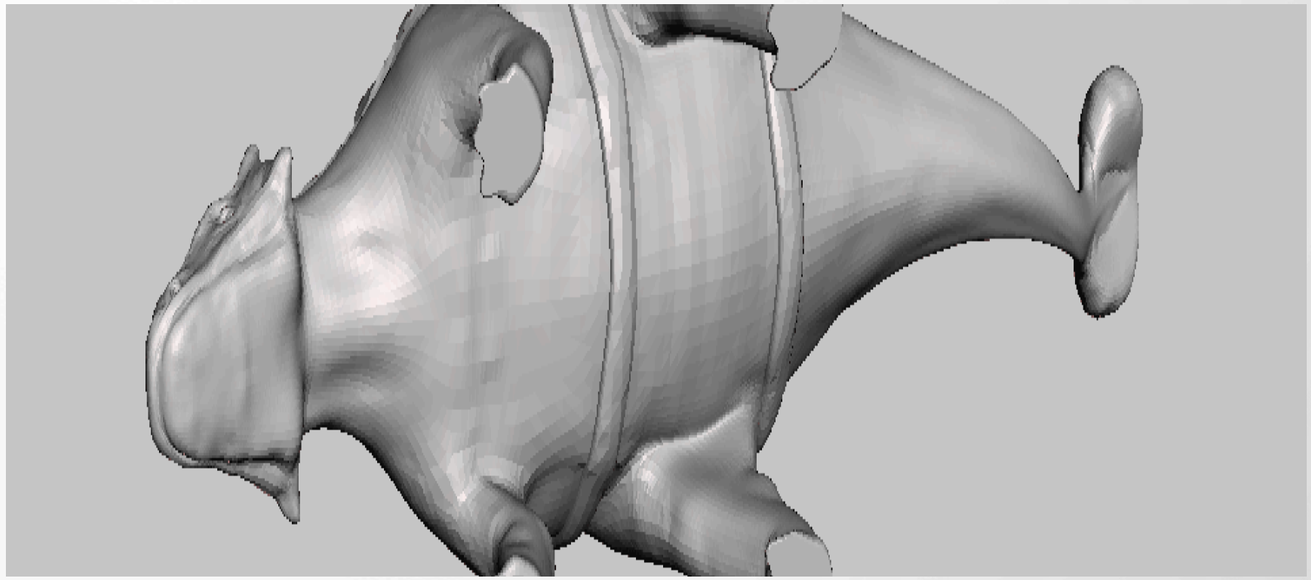

Use strong dimension of the print

- Orient your parts so that the greatest stress is perpendicular to the direction of the filament
- Create multiple parts if necessary so that all are strong

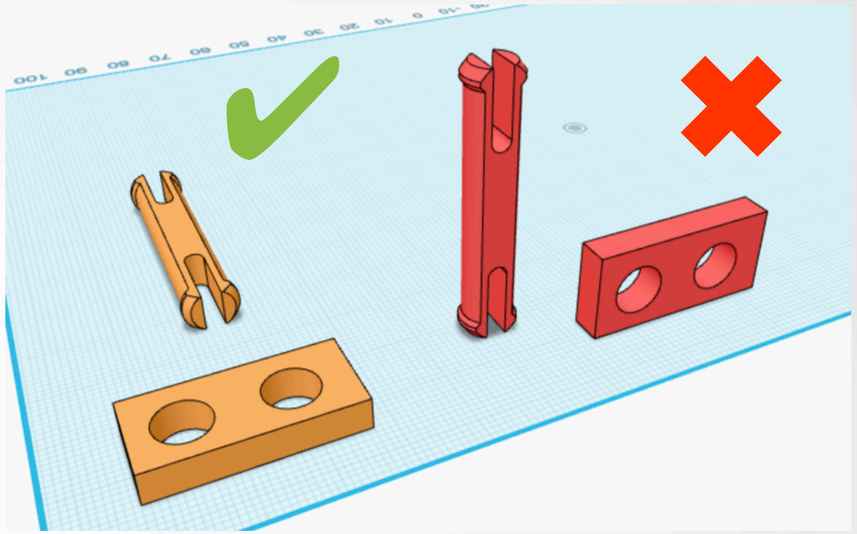

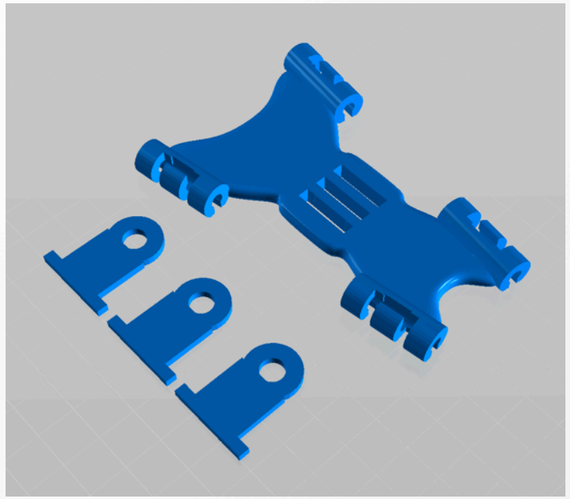

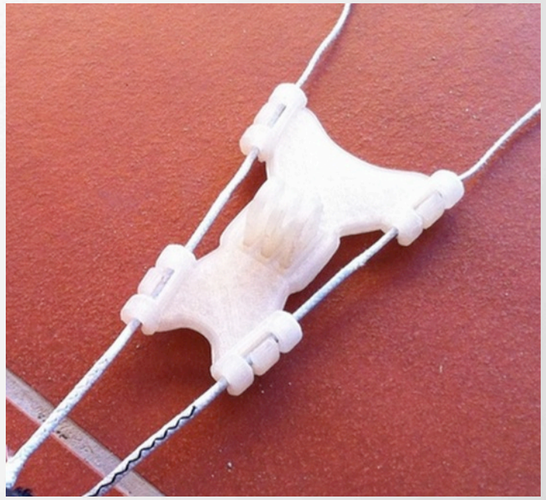

Divide into multiple parts

- Slice models into multiple parts to reduce need for support, reduce print time and improve finish
- Make cuts to reduce visible seams

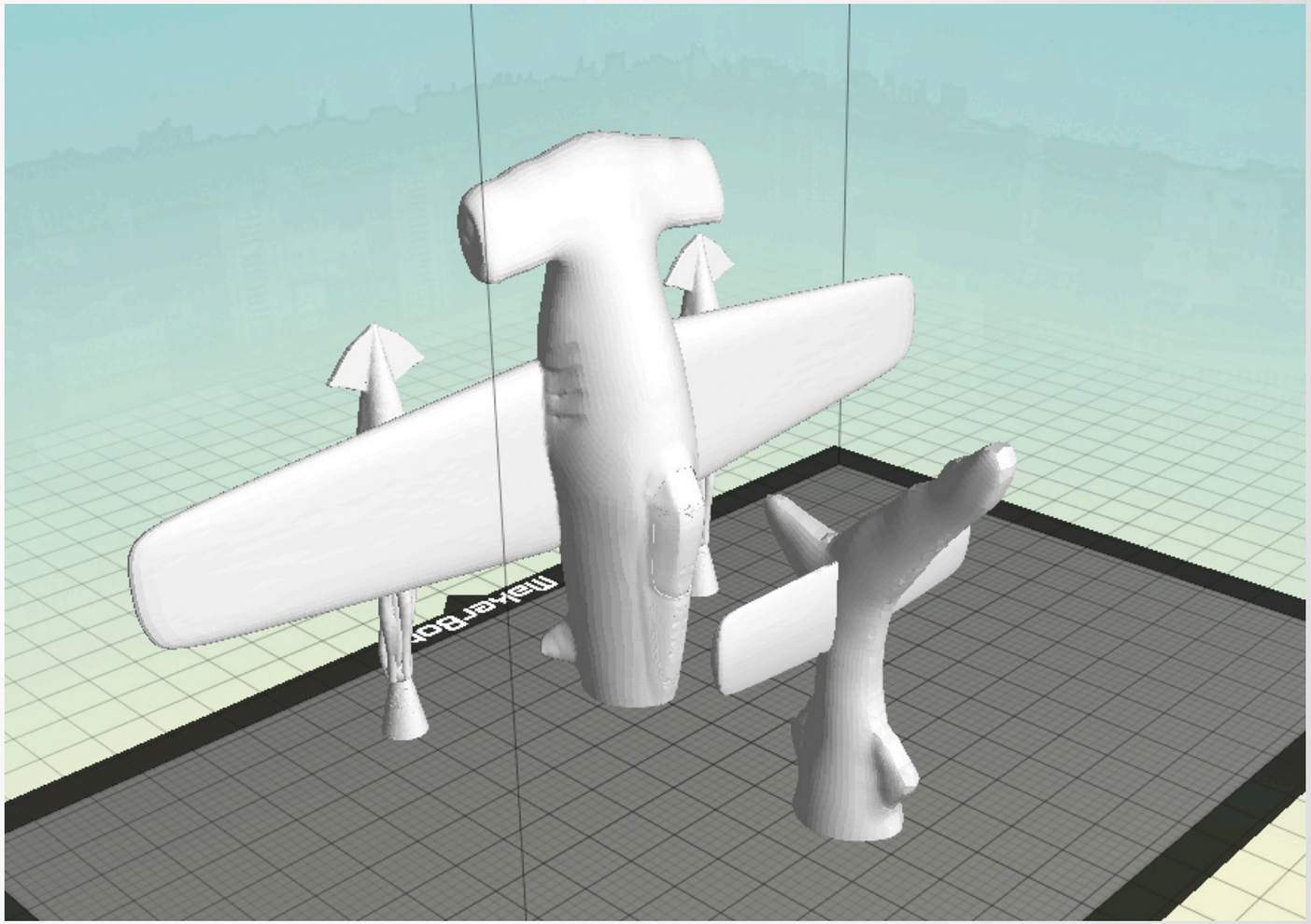

Minimize support

- Orient to minimize support
- Ensure supported areas are not visible

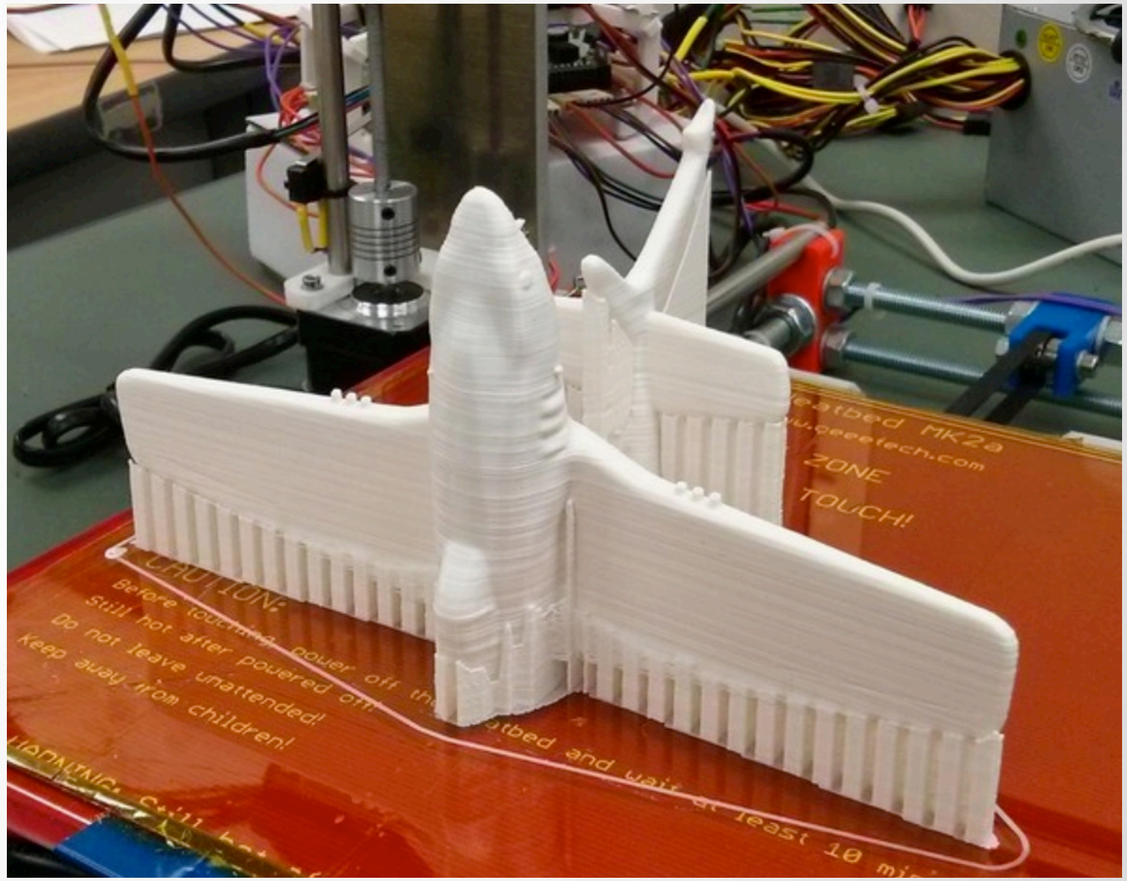

Make good meshes

- Solid
- Watertight
- Normals
- Not too many polys
- No self-intersections
- Use boolean unions to ensure a single body

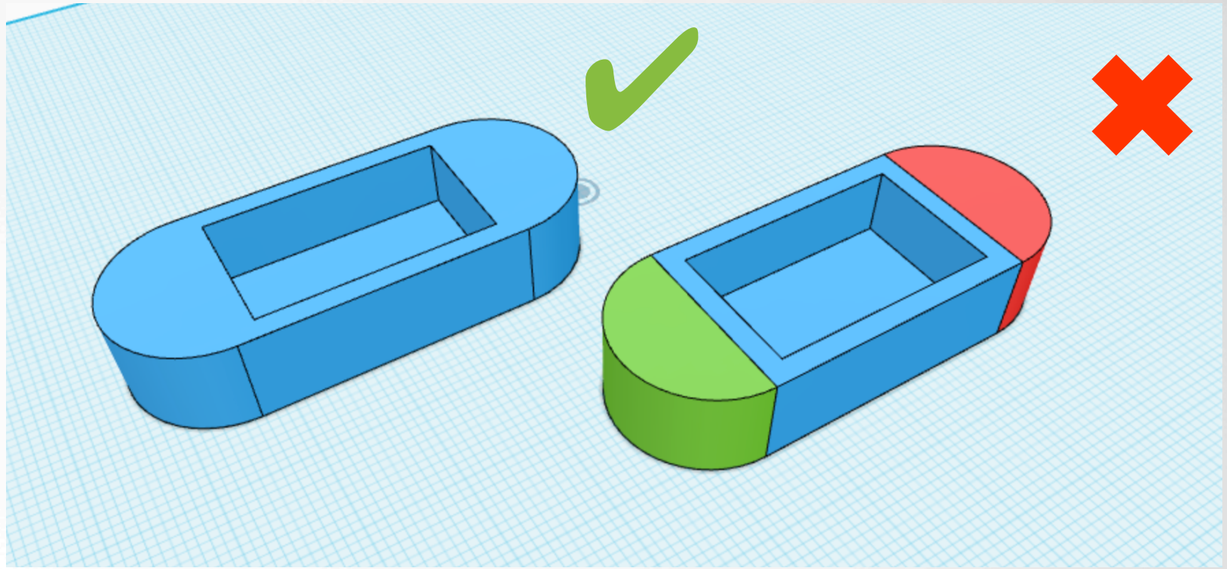

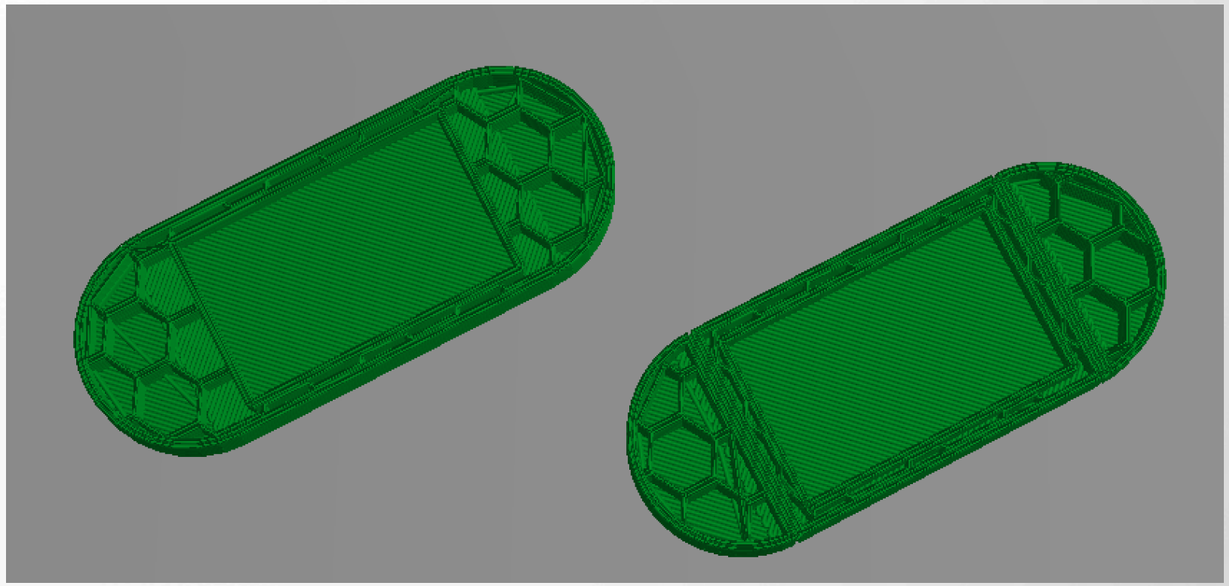

Repair meshes

- Use repair and analysis tools to fix
  - Autodesk 3D Print Utility
  - Meshmixer
  - Project Miller
  - Tinkercad!
  - Netfabb
  - Meshlab

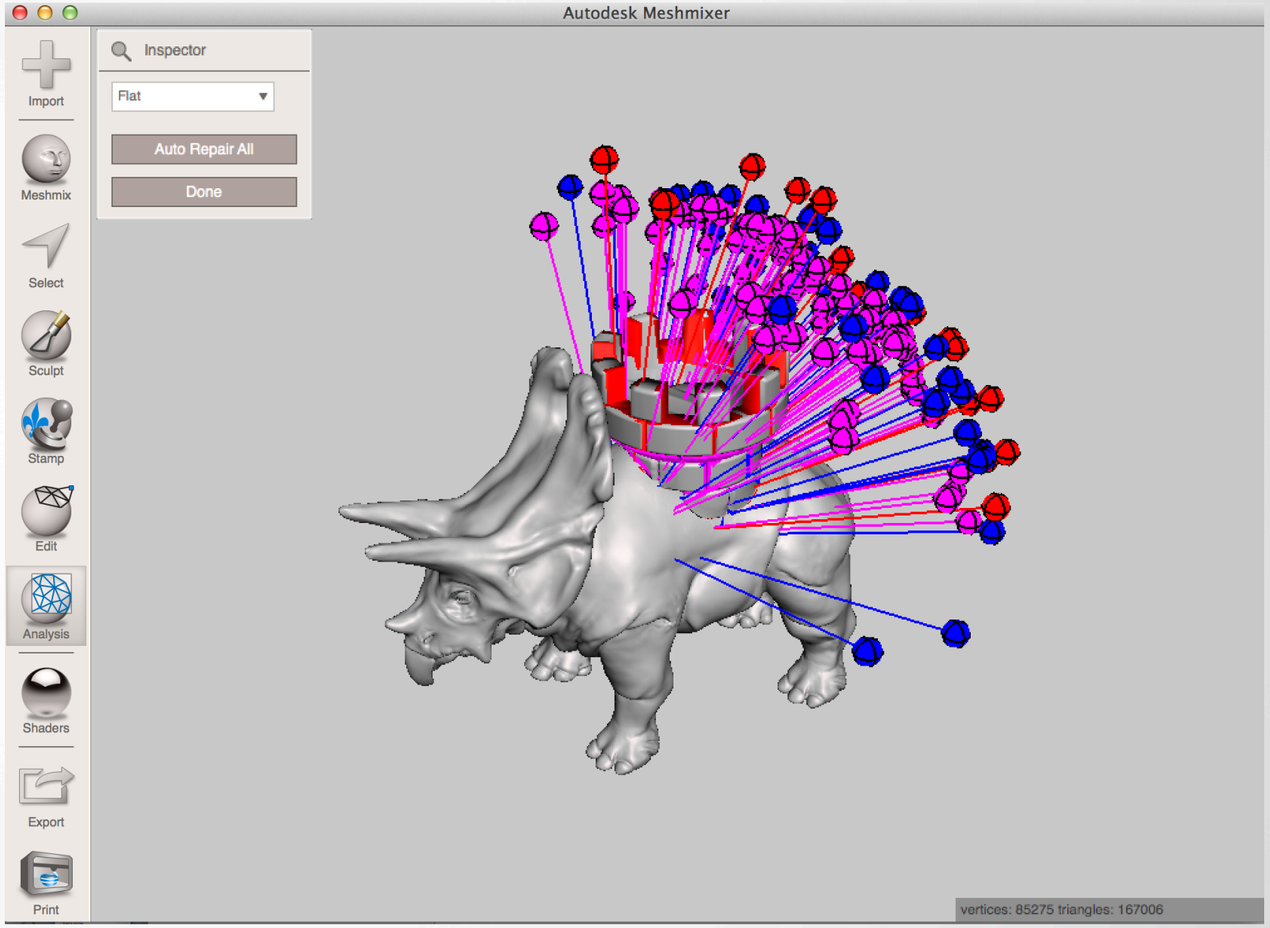

Tools

- Meshmixer
- Project Miller
- Autodesk 3D Print Utility
- Tinkercad
- Netfabb
- Meshlab

Meshmixer

- Superb tool for working with meshes
- Sculpt, remix, edit and paint
- Identify overhangs and generate support
- Powerful pre-print analysis tools

www.123dapp.com/meshmixer

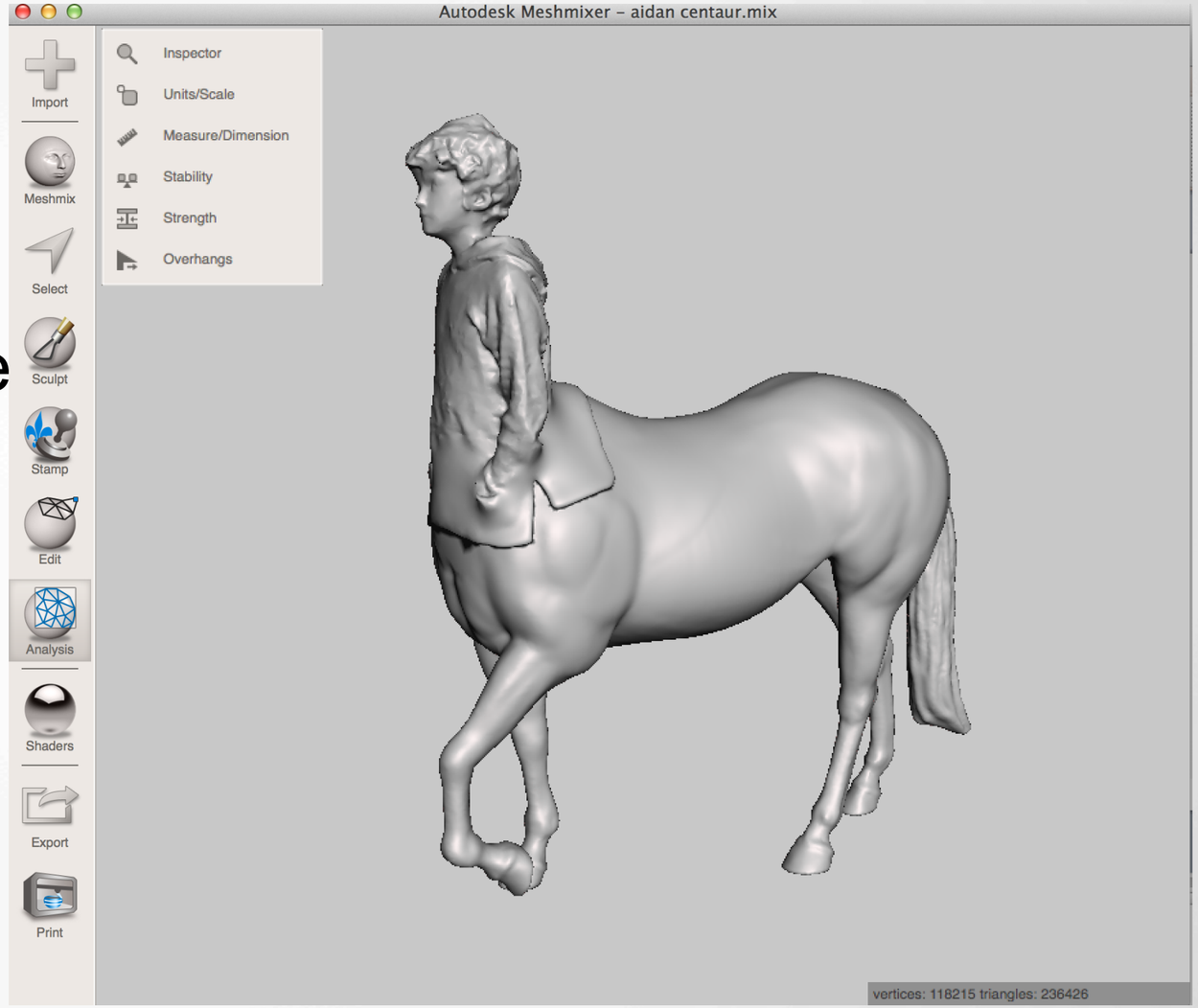

Project Miller

- Experimental tool for previewing and fixing meshes
- Can help identify and fix self-intersections
- Powerful surfacing and remeshing tools

labs.autodesk.com/utilities/miller

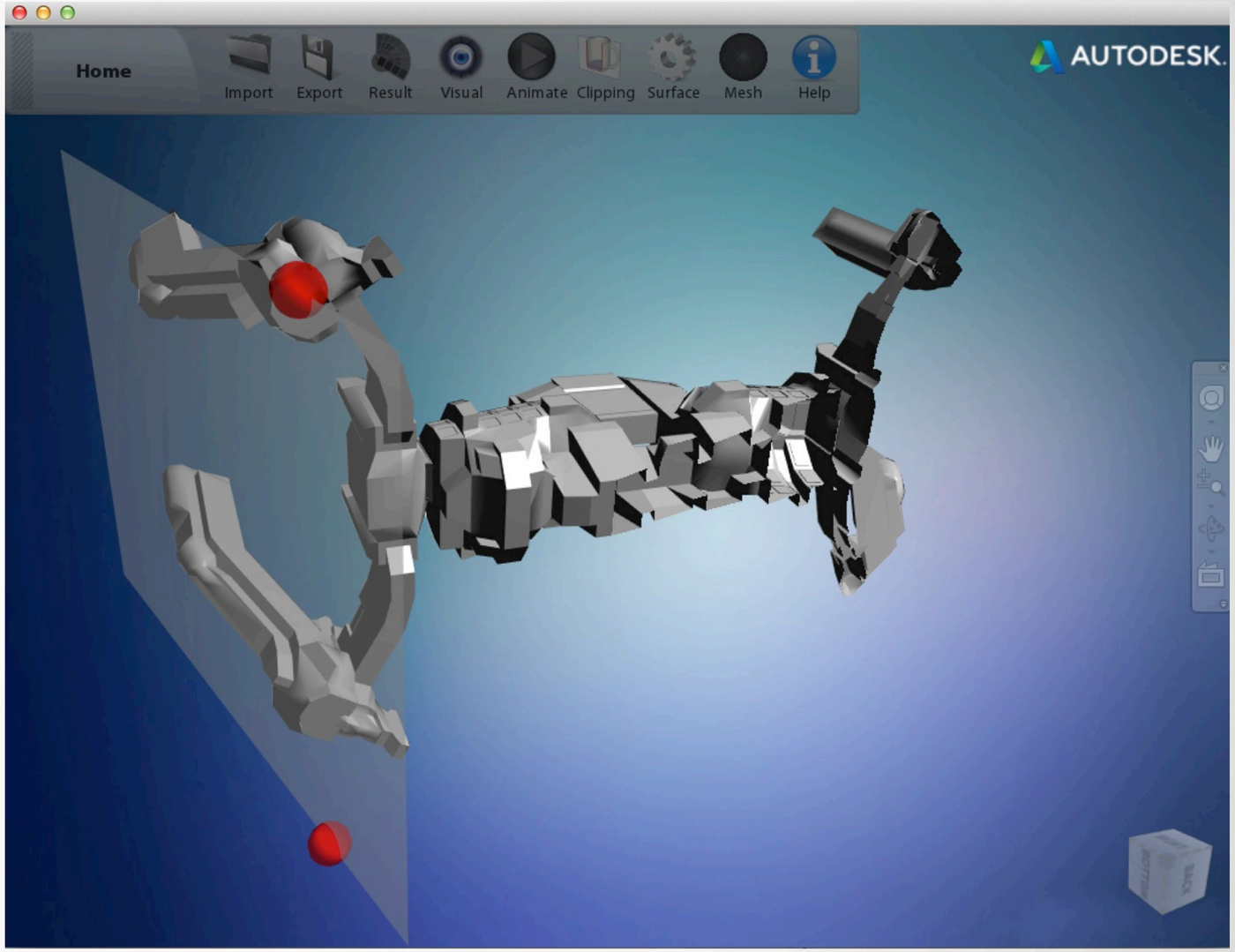

Autodesk 3D Print Utility

- Dedicated pre-print uility
- Tightly integrated with 123D suite
- Automatic mesh repair
- Hollowing and thickening

http://apps.123dapp.com/3dprint/install.html

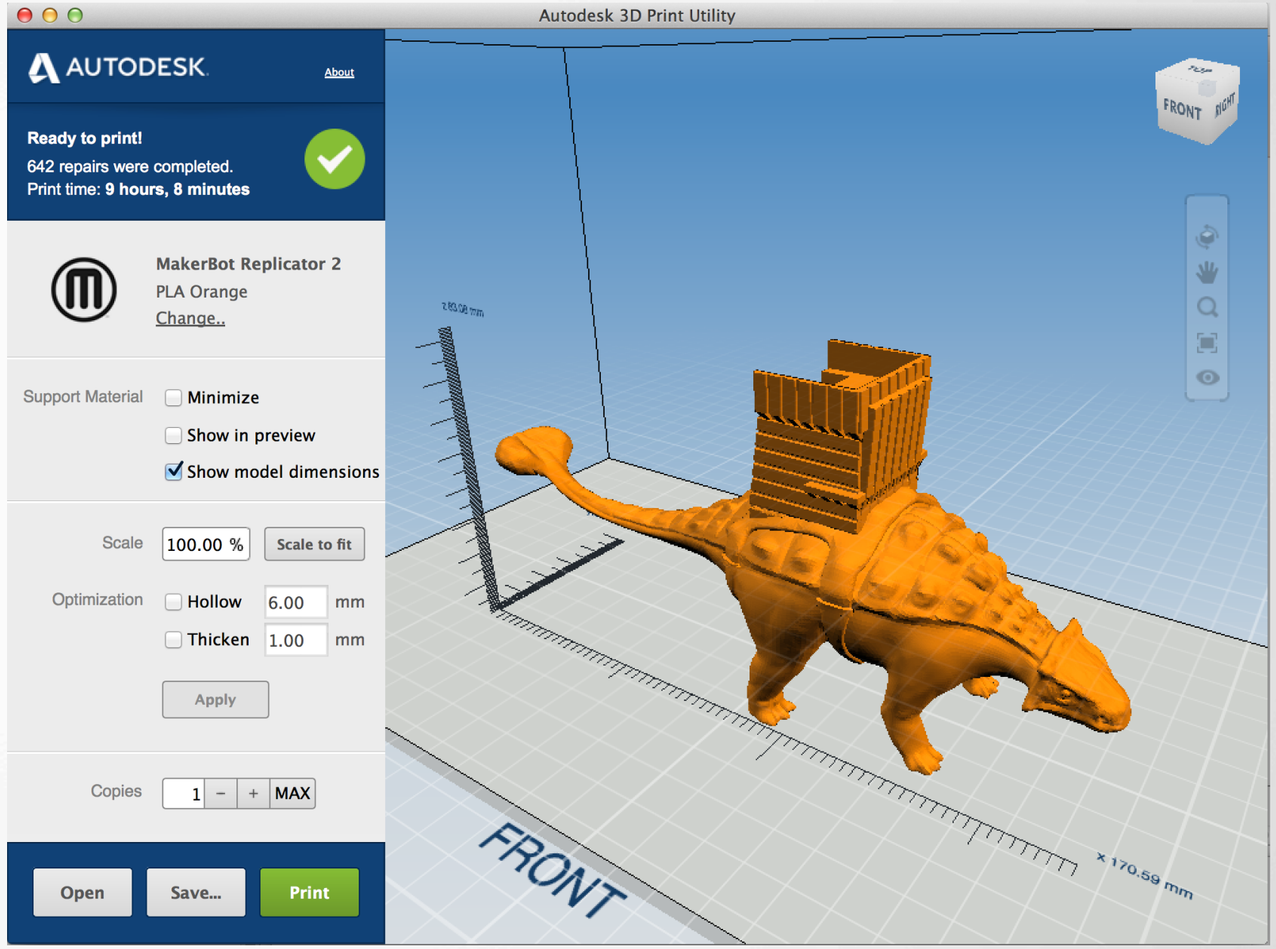

Tinkercad

- Excellent online tool for working with simple geometry
- Can import, modify and export STL files
- Superb automatic mesh repair

tinkercad.com

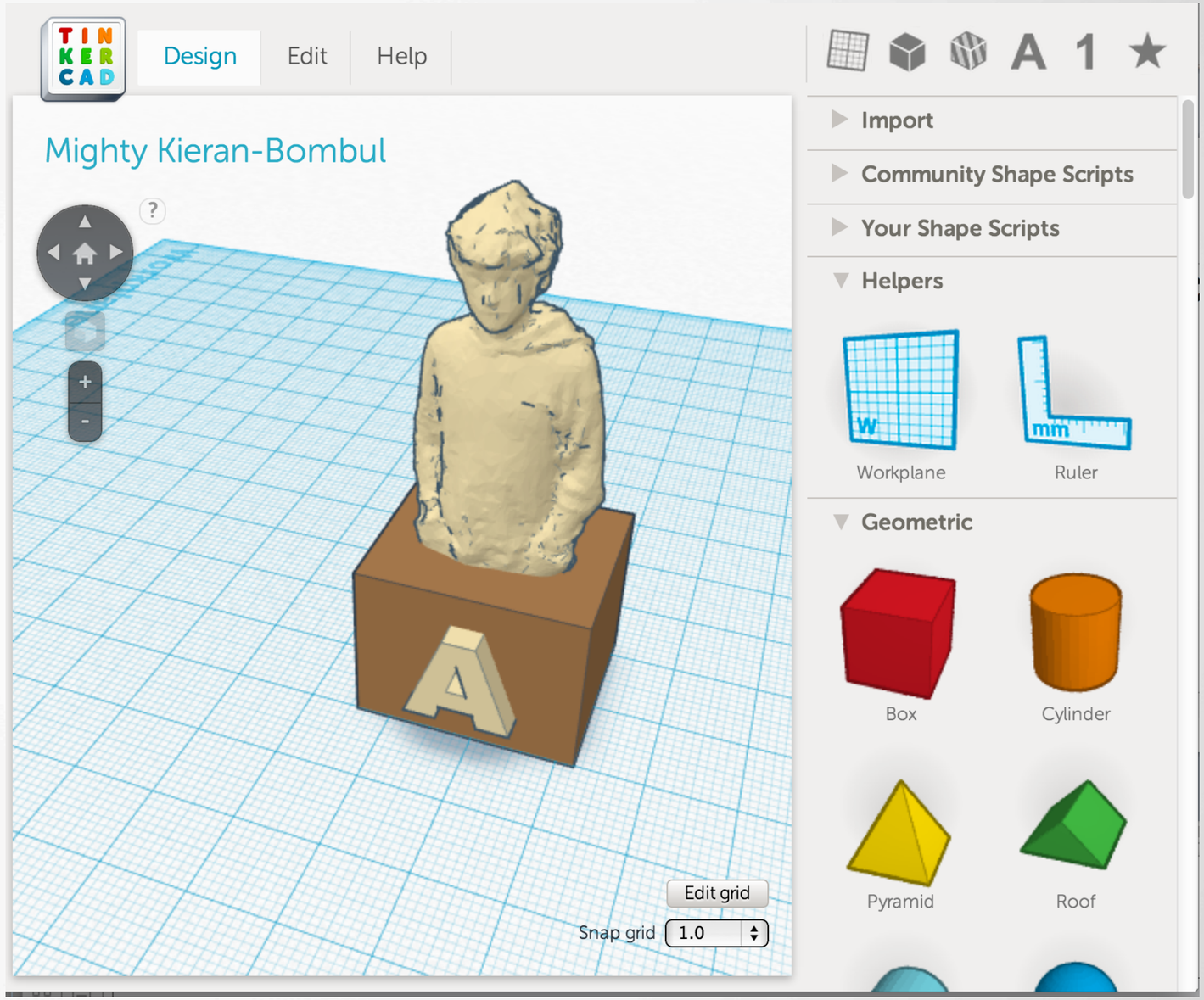

Netfabb

- Dedicated mesh repair and pre-print tool
- Great control over repair actions
- Excellent slicing tools
- Free & pro versions available

netfabb.com

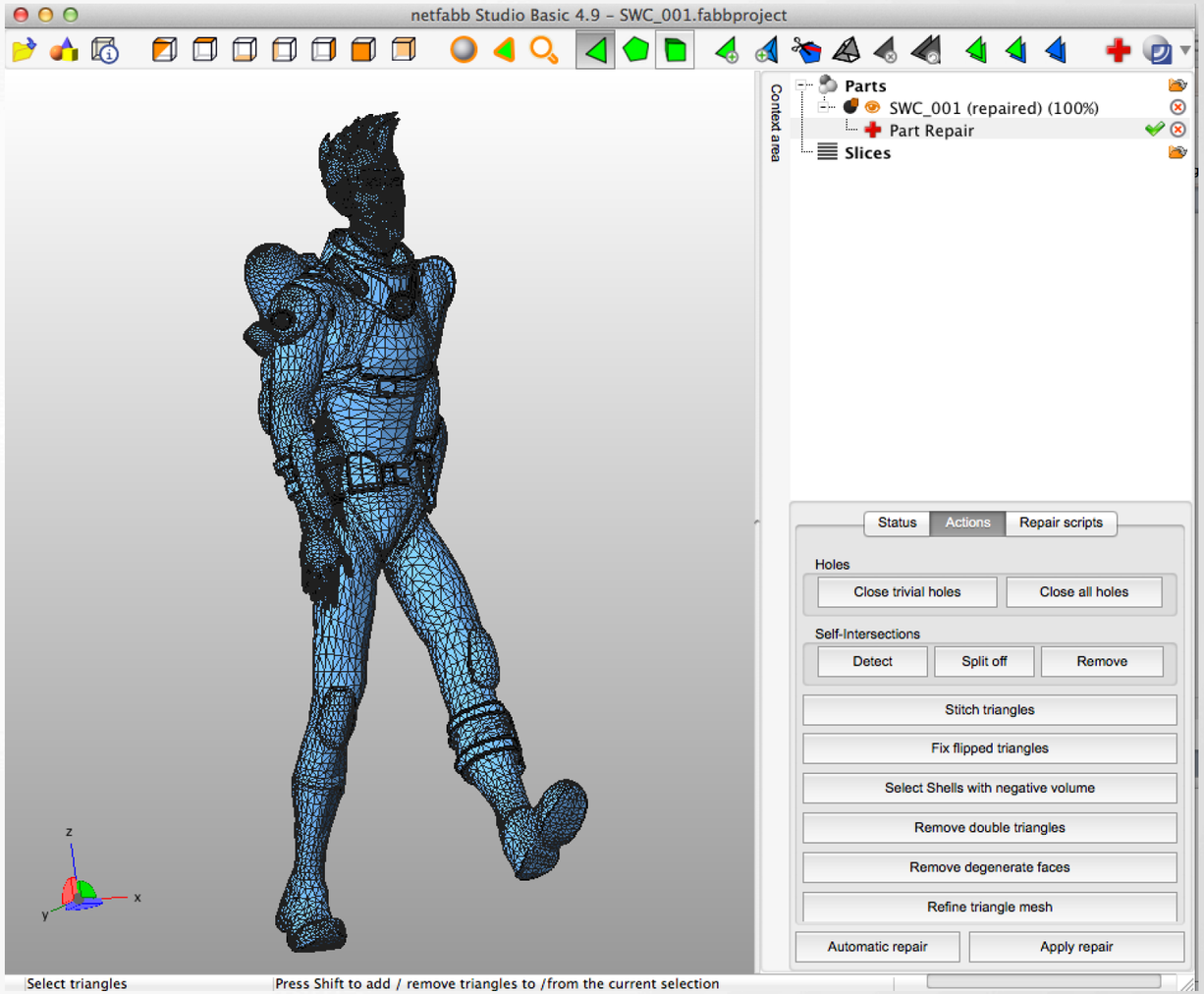

Meshlab

- General purpose tool for working with meshes
- Detailed tools for analyzing and repairing issues
- Steep learning curve!

meshlab.sourceforge.net

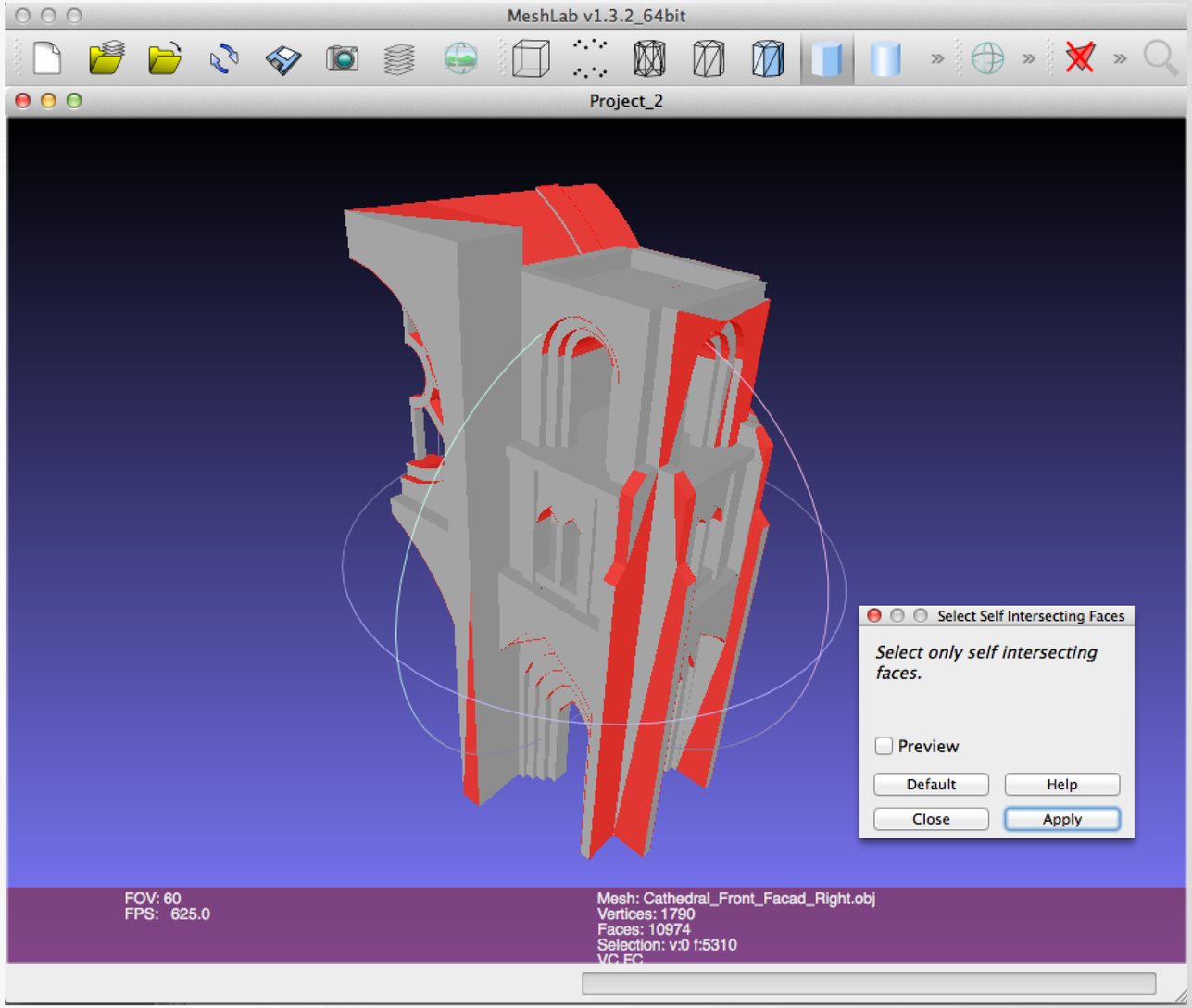

Conclusions

- Consumer level 3D printers can make strong, practical parts – in fact this is the main use case
- In order to get the most benefit, it makes sense to design specifically for the characteristics of these printers
- Fortunately, the constraints and design rules are simple
- Tools to get good results are becoming better and more accessible

Questions?