AUTODESK UNIVERSITY 2016

Increasing the Volume with Inventor® Tube & Pipe

Chris Benner– Powell Fabrication & Manufacturing Inc.
Mark Lancaster – Synergis Engineering Design Solutions

PD15320

This class will be a presentation of tips, tricks, and workarounds for the Inventor software Tube & Pipe add-in. A powerful design tool built into the Inventor software landscape, Tube & Pipe is the bread-and-butter tool for many designers. We will explore some advanced editing techniques, as well as secrets and workarounds for successfully routing and populating pipe runs in this environment. The class will focus on rigid piping, but most tips will be applicable to flexible hose and tubing design as well.

Learning Objectives

In this class we will:

- Learn about Dynamic Route Editing Techniques
- Learn to Copy & Reuse Pipe Runs and Make Them Adaptive
- Learn to Fill Unwanted Gaps in Pipe Routes
- Learn to Work with Self Draining Lines
- Other Productivity Tips & Tricks

About the Speakers

Chris Benner

Chris Benner is the CAD Department Supervisor at Powell Fabrication & Manufacturing, Inc. in St. Louis MI. He has been working as a mechanical designer and drafter for the last 20 plus years, using Autodesk Products for the majority of that time. For the last several years he has been the Department Supervisor and Vault Administrator at Powell Fab, integrating Vault with Autodesk Inventor, AutoCAD, AutoCAD Electrical and most recently AutoCAD P&ID. He has been implementing changes to the company's document management procedures using Vault Professional as the main system for lifecycle and revision control, and Engineering Change Orders to control all drawing changes. In 2012 Chris was recognized as an Autodesk Expert Elite for his activity on the Autodesk Discussion Forums, social media and for his blog Cad Tips, Tricks & Workarounds. CADNotes.com and Design & Motion.net, and AUGI World have also published some of Chris' articles.

AUTODESK® EXPERT ELITE

Email: *cgbenn728@gmail.com*

Twitter: @cgbenner

Linked In: Christopher Benner

Autodesk Forums: cbenner

*Blog:*CAD Tips, Tricks & Workarounds

Mark Lancaster

Since 2013, Mark Lancaster has been the Product Support Specialist for Synergis Engineering Design Solution (an Autodesk Platinum Partner located in Quakertown PA). Besides the focus on the Autodesk manufacturing & data management solutions along with Autodesk licensing, Mark is also a regular contributor to the Synergis CAD Blog web site. Mark is an Autodesk Certified Inventor Professional for the past 3 years and his expertise is centered on frame generator, routed system, content center and iLogic. Besides assisting Synergis customers with product support issues, Mark also spends his time on the Autodesk Licensing/Installation & Inventor forums assisting other user like yourself. Mark recently became an Autodesk Expert Elite but is no stranger to the CAD world. He started his career out (late 80s) by performing drafting/design duties using a (drafting) board and CAD software. Mark has over 20 years of experience in the manufacturing world, 15+ years in the 3D modeling world, and is a self-taught AutoCAD user since Release 9. However most of that time has been around CAD and document management administration. His motto for many years has been "I'm here to assist you in getting your job done" and is always looking for better ways of doing things due to his "Lean Manufacturing" background.

AUTODESK® EXPERT ELITE

Email: Mark.Lancaster@Synergis.com

LinkedIn: Mark Lancaster

Autodesk Forum: Mark.Lancaster *Blog: SynergisCad Blog*

1. Routed System Structure (Presented by Mark Lancaster)

In this section you will learn the backbone of an Inventor Routed System Model. The information provided will help you understand its structure, making it easier for you to navigate and work with these types of models. Some of the information may be new to you and other things you may already be aware of.

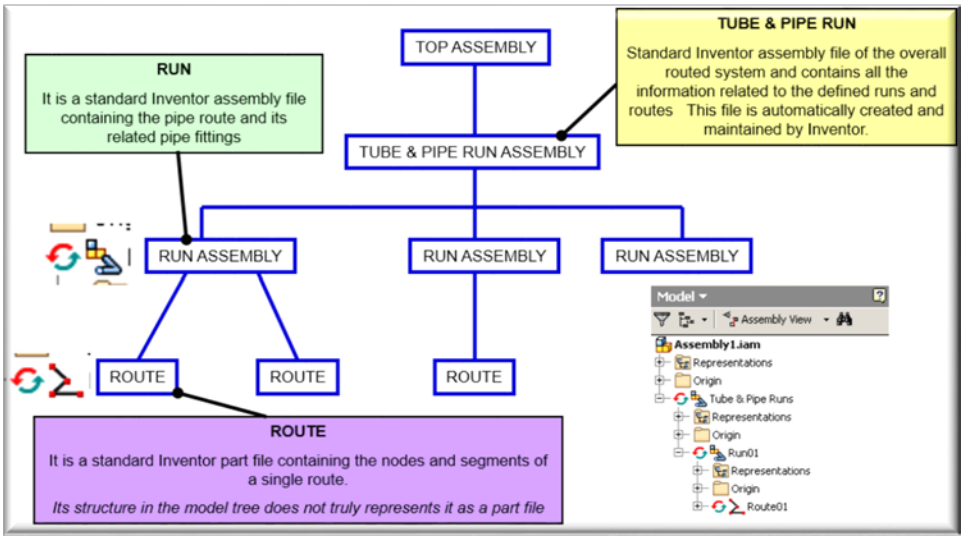

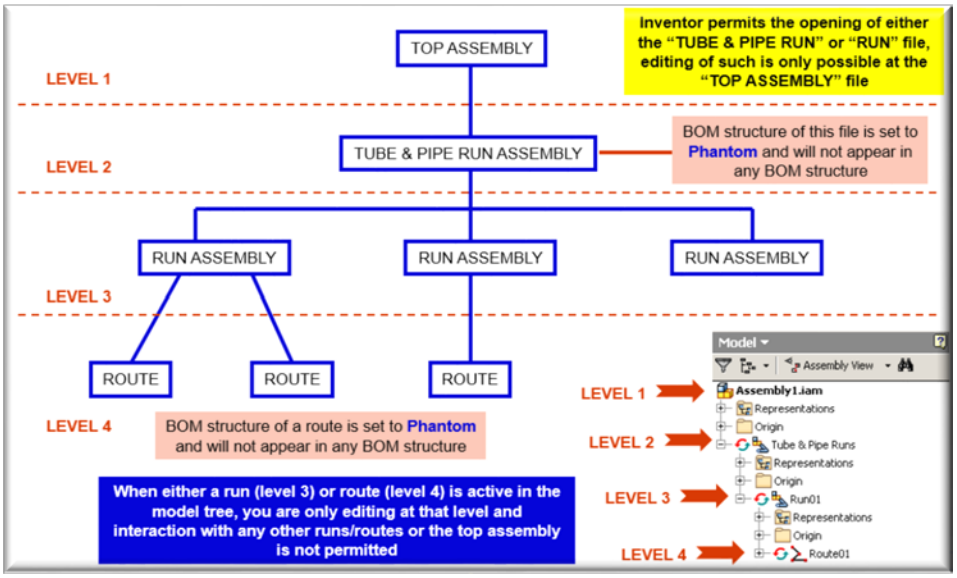

Basically I have always broken down the overall routed system model into 4 levels.

LEVEL 1: This is a just the normal assembly you start from your designated template and save before you can even start the Tube & Pipe environment. This level is called the Top Assembly.

LEVEL 2: This level is called the Master Pipe Run (or the overall Tube & Pipe Run Assembly). It is automatically created (and maintained) by Inventor. Basically it hosts all of the information related to the pipe runs and piping styles you have defined for this piping model.

- Its BOM structure should already be set to PHANTOM so it doesn't appear in any BOM.
- Although this sub-assembly can be directly opened for edit, it is not recommended to do so.

LEVEL 3: This level is considered the individual pipe runs of your model. Each run is a separate sub-assembly and is adaptive.

- One of the key things with pipe runs is that there are adaptive so they can change when the overall model changes. However, there may be a couple of workflows that you may not want a given pipe run to be in this state. We will demonstrate one of those instances.
- A pipe run can also be opened for direct editing but it's not recommended that you do so. However, we will be demonstrating another workflow that will require you to open the pipe run and make changes to it. The key to remember, is that you are unable to save the changes at this level and the save must occur at the overall top assembly.

LEVEL 4: This level appears under each pipe run and is related to the pipe routes that you create for a given run. Routes are Inventor part files that contain the "stick" diagram of your pipe run centerline. A pipe run may have a single route or numerous routes.

- Pipe route files have a BOM structure set to PHANTOM so they don't appear in any BOM structure.

Also when working with a given pipe run or pipe route, the key thing to remember is that you're unable to interact with other runs and routes. We will be demonstrating how to overcome this and show how you can align fittings across different pipe runs.

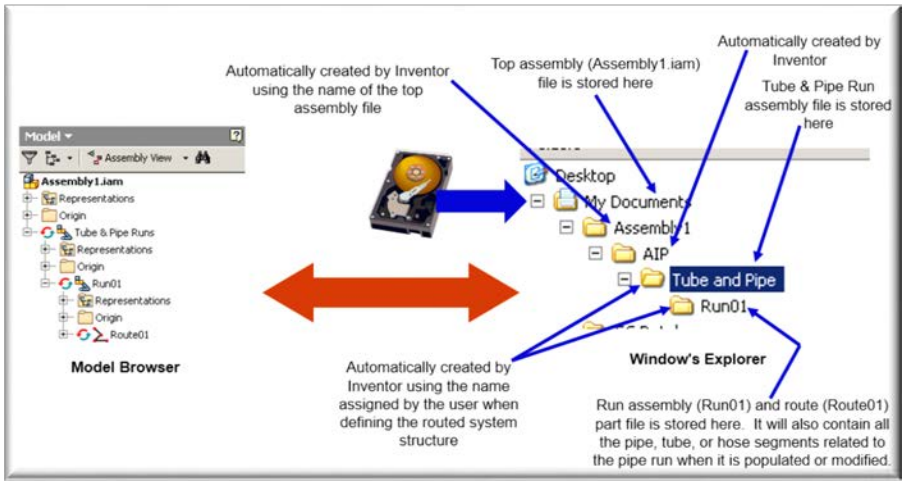

Outside of the Inventor browser pane, it is also important to understand the folder structure that is created by Inventor when a routed system model is created. The above image demonstrates

this structure, however it is solely based on the accepted defaults when you create your routed system model and the related pipe runs.

Back when I use to teach Inventor Routed System to the CAD group I supported, one thing that I learned quickly is that users sometimes confuse the terminology which then leads to incorrect information being shared. For example, a user came to me once and said they were having an issue with a pipe route, but in fact their issue was related to a pipe run. So I always tell people, a pipe run and pipe route are not the same and you should be clear on what you are working with. So as a reminder, let's just go over the basics…

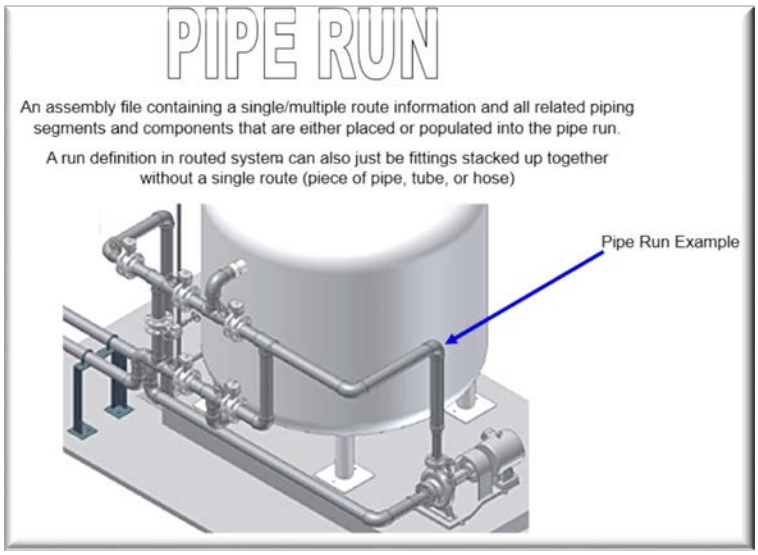

Pipe Run: In the above image you can clearly see a pipe run is the components that make up a process pipe line. It holds things like the pipe segments, tees, elbows, valves, tubing, and etc. In my opinion, there are 3 types of pipe runs, a non-route one, populated, and unpopulated.

Non-Route Pipe Run: Although this is not an official pipe run designation by Autodesk, I wanted to include this because you can create a pipe run in your model without a single pipe route associated to it. We will be demonstrating this but basically it's a pipe run composed of "connected" piping components.

Populated Pipe Run: This is a pipe run that is already populated based on the layout of a pipe route and the style that is associated to that given route. Basically Inventor will automatically place the key components (i.e. pipe segments, elbows, couplings) that are defined in the style onto your pipe run

- Other piping components (i.e. valves, tees, branches, instruments) that are also required must be manually placed by the user. We will demonstrate some of the tools that you can use to do this.
- When the associated tube & pipe style changes, the populated pipe run automatically updates the key components (those components defined in the style). Manually placed components must be updated individually by the user.

Un-Populated Pipe Run: When users have asked me in the past how you would describe an un-populated pipe run, I usually tell them to simply think of it as a naked pipe run and it's not fully clothed. In this case, the components that are defined in the tube and pipe style are not applied yet to the pipe run.

Which leads to another question by new users. Why have an unpopulated and populate route in your model? Why have one over the other? For starters, you can apply your piping components to a populated or unpopulated route. When a route becomes populated, the more resources it takes to manage it. If it's all possible, I recommend that you work with unpopulated routes until it's not feasible to do so anymore. There's always been struggle with this for years. Populated routes are necessary so you can properly layout your model, but the more you have, the bigger the impact on performance. When working with un-populated routes, you increase performance but sacrifice your overall designing capabilities. In the end you have to choose which method works for you.

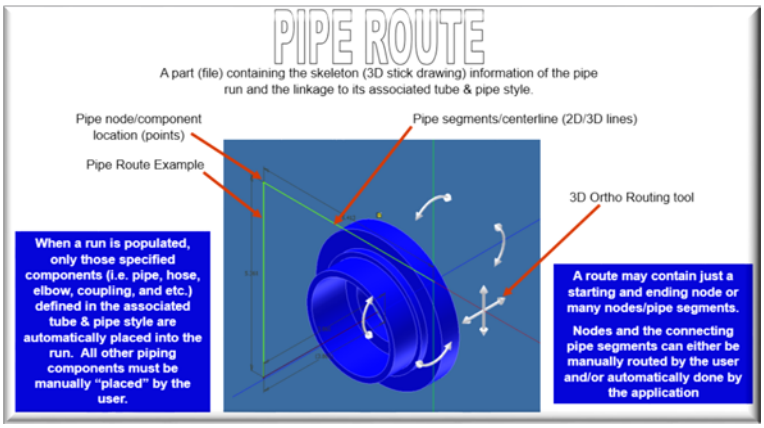

Pipe Route: A simple definition of a pipe route is defined as the Inventor file holding the 3D Sketch that represents the centerline of your rigid pipe, bendable tubing or flexible hosing and linked to the style that you have selected. When you create your pipe route, you assign a tube & pipe style to it and then you route your pipe (run) centerline throughout your model as needed. In some cases, a route may also be auto-generated by Inventor based on the nodes (points) that you are selecting. Pipe routes are adaptive/associated to the pipe run that it falls under. Other key items about routes:

- The routing tool will offer different options based on the piping style that is associated to the route.
- When routing, the sketching environment is limited and it's important to know that the interface also provides other tools such as included geometry, construction lines, point/rotational snap, and constraints to aid in the routing construction.
- Nodes may also be inserted onto the route to break routes into segments and/or assign components to that given node locations.
- A given pipe run can have a single pipe route or many routes associated to it. But a pipe route can only have a single tube & pipe style assigned to it. For example if a pipe run

changes “pipe” size at a given point, another pipe route must be started and a different style assigned to it.

- Routes can float if not properly locked down. Although as new Inventor releases have come along, the floating aspect has not been a big impact like it was in the past but you should still be aware of this.
- Routes can be started, stopped, and started again. The key here is to make sure you know which level and which route you are working on. Routes may also be disjointed and put back together again as design changes occur. We will be demonstrating this.
- When you route, you have the ability to auto-dimension the route or not to do it at all. I’ve always been a fan of auto-dimensioning but in doing so you could hinder yourself when it comes time to modify and controlling the route to your design requirements. So I always tell users, to think about the dimensioning aspect and I wanted to share a couple key points when working with route dimensions.
    - Think about using driven dimensions or switch certain route dimensions to driven or reference type (X.XX)
    - Not everything needs a dimension.
- The final point we would like to reinforce about pipe routes is a route that contains auto-route information. Auto-routes can be automatically generated based on steps that you take when routing. However, it’s important that auto-routes always be converted to sketched routes after they are created. Do not leave routes with auto-route information within them because you will most likely end up with a results you’re not expecting.

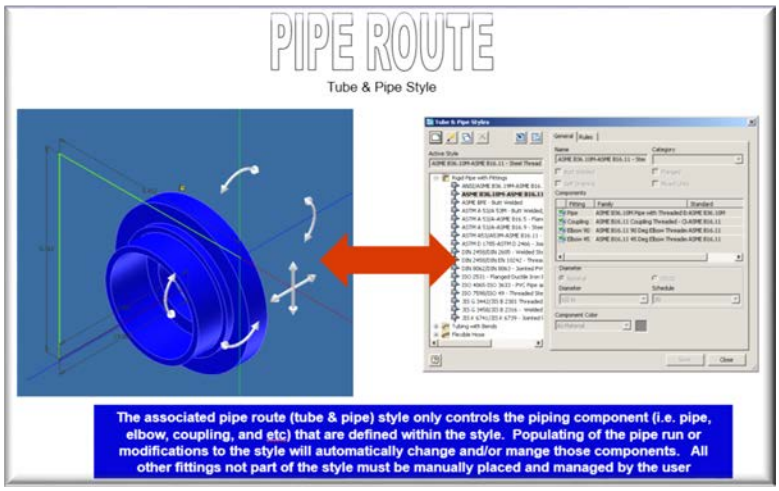

Tube & Pipe Style: Another key component of a pipe route is the style that you create and assigned to it. Although this section is not going into details in how to create a style, we wanted to share some key information when working with styles

- As stated earlier, a style must be assigned to each route definition.
- We recommend that you create the style prior to defining the route.
- When creating the route make sure you are in the correct style category (of the style editor), meaning rigid, tubing, or flexible hosing. If you save the style under the

wrong category, most likely you will not be permitted to switch a rigid style to bendable or visa-versa.

- Styles may be exported and shared with others in your organization or export the standard ones you need to a common location for safe keeping. Although you can modify the provided routed system template and defined your styles in it. I was never a fan of doing this and I've always imported the styles that I needed for a given project.

In closing out this section, there are a few additional thoughts about routed system we would like to share.

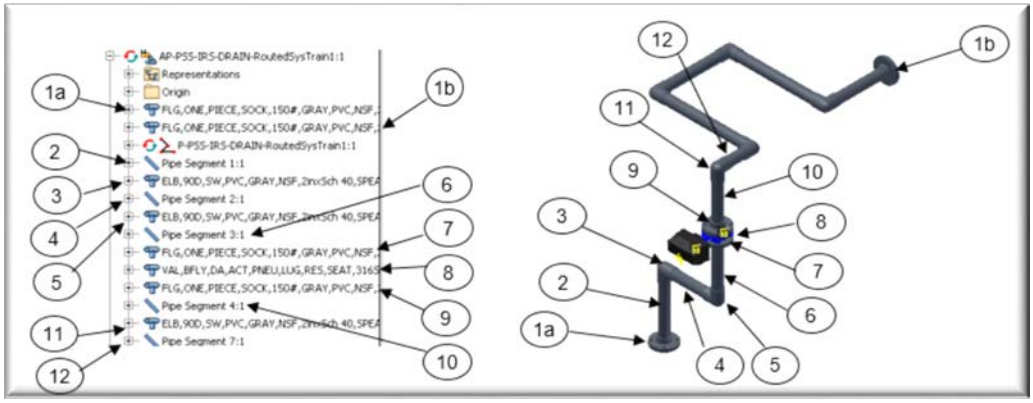

- When looking at a given pipe run, the browser layout may not make sense as shown in the above image. When piping components (#2-12) are populated and/or placed onto the pipe run, the browser will always match the flow of the pipe run. In addition, these components will always appear below the route definition in the browser. When piping components (#1a/1b) are placed before a route is even started or "connected" to the pipe run, those components will always appear before the route definition in the browser. Their order is always based on the order they were placed into the model.
- Although we would like to think Inventor is perfect, pipe runs and/or routes can simply fail or be corrupt at some point. Chris and I have seen this before and most likely you have too. Our advice, don't struggle with these types of issues because there's not a lot you can do to resolve them. Just recreate them, because you will waste more time trying to figure out what happened instead of just redoing them.
- Think about your overall model and the complexity of it. Meaning don't do an entire process plant layout in a single routed system model. Think about the model's impact. You may need to break your model up into smaller chucks.

In the end Chris and I hope you learned at least one (1) new thing about the Routed System structure.

2. Dynamic Route Editing (Presented by Chris Benner)

In this section we will discuss how to edit your pipe routes dynamically, without having to activate the sketch itself, and see the results in real time.

Getting Ready

Dynamic Route Editing is essentially a workaround for having to activate and edit the sketch controlling your pipe routes. This is very handy when you are tweaking the positions of fittings, or the lengths of pipe segments, and you want to see the results quickly. The catch to this, is that your routes need to be fully dimensioned and constrained before attempting this, as the results could be interesting at best. Bear in mind, route nodes or segments cannot be added using this method, this is strictly for moving things around.

To begin, you need to activate the pipe run in question, find the route in your browser, right click and select Dimension Visibility. This will give you a check mark showing that the dimensions for this sketch will be visible. You must also go to the View Menu on your Ribbon, Object Visibility, and make certain that 3D Sketches and Sketch Dimensions are set to visible. You can set these to a Design View Representation and save it to make it easier to toggle the visibility.

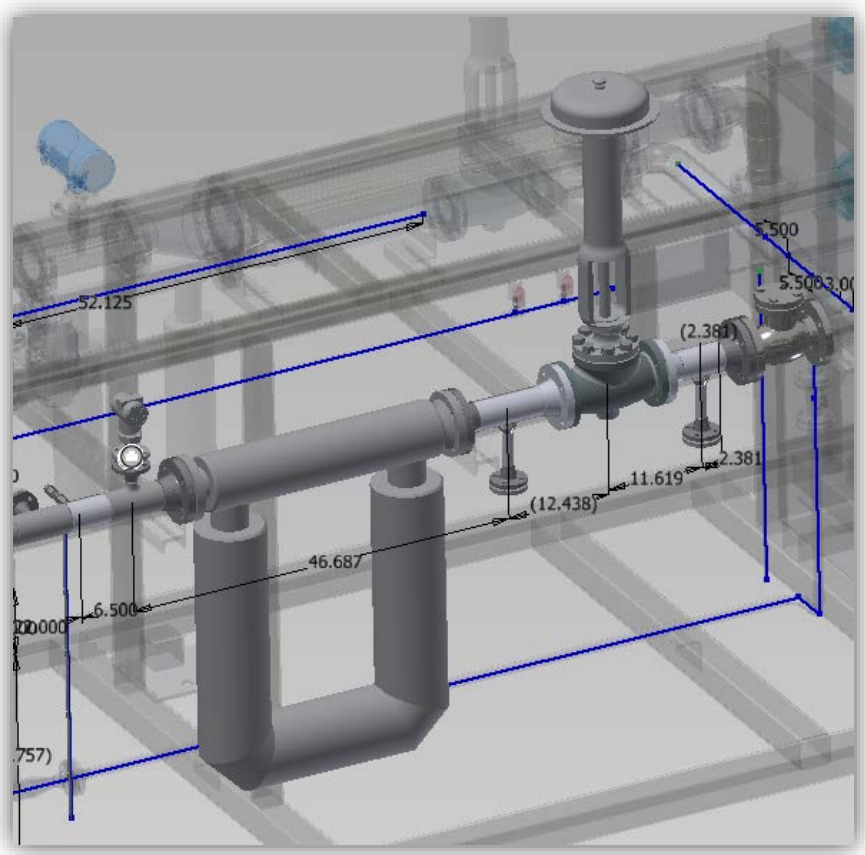

Editing the Route

Once you have prepared the route dimension visibility of the routes you wish to edit dynamically, the technique is fairly simple. It can be used at any level of the assembly, but note that the sketch will only update in real time if you are at the pipe run level that the sketch is on. At any other level of the assembly, and Update or Global Update will be required to see the results of the editing.

To perform the edit, use Shift Right Click, and Select Sketch Features to activate sketch priority. This will allow you to select and edit the visible sketch dimensions while the entire pipe run is still visible. Changing these dimensions will cause the objects on that route to shift accordingly, and you can see the results in real time. That's all there is to it, except to remember to set your selection priority back to either part or component before moving on with your work. This method, as mentioned, is great for design finalization as you are moving things around to get proper spacing, and can also be used to make quick adjustments for clearances or even cosmetic finishing touches.

Dynamic Route Editing

3. Copy & Re-Use Pipe Runs (Presented by Chris Benner)

This section will discuss a couple of ways to re-use an existing pipe run.

Identical Pipe Runs Re-Used

Inventor Tube & Pipe makes it fairly easy to create identical pipe runs in your assemblies. In fact, the process is as simple as copy and paste. In the past, and in the documentation for MD-5386 which accompanies this handout, we mention that tube & pipe fittings should never be copied and pasted within a pipe run. This still holds true, however an entire run may be copied and pasted into an assembly without creating any difficulties. An example might be a system that has dual pumps with identical pump suction lines side by side. You could certainly create each one individually using two separate tube & pipe runs, but if the lines are identical, there is no need for that.

Before copying the pipe run, navigate and activate the Master Pipe Run of your assembly. To perform the copy, find the pipe run sub-assembly in your model browser or on your screen. Select it and use right mouse click, Copy. Then select a spot on the screen to drop the copy, right click again and Paste. You can also use standard Inventor assembly tools to place a copy of the sub-assembly directly from its location in your file system, or from Vault. As long as it is a copy of the same sub-assembly, both will update when you make changes to one of them.

Making Copied Pipe Runs Adaptive

What happens, however, when someone comes to you shortly after doing this, and asks to add some fittings or instruments to one of the copies, and not to the other? Obviously they are no longer identical, so you have a choice. The new, modified pipe run can be created from scratch after deleting the copy from your assembly, or you can choose to make the copied pipe run adaptive. Making a pipe run adaptive essentially takes it from a standard Inventor assembly and turns it into a Tube & Pipe run in its own right. Once adaptive each piece of the pipe run, aside from library components, will be able to be edited without affecting the run it was copied from. It becomes completely independent.

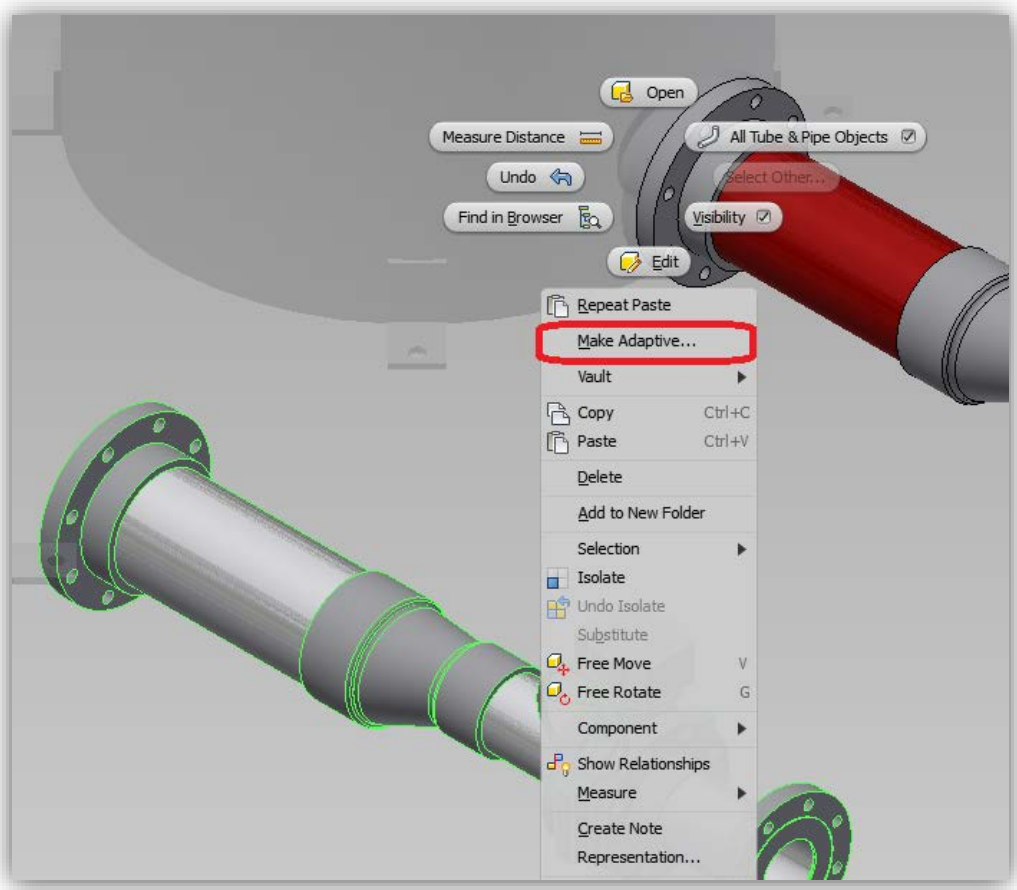

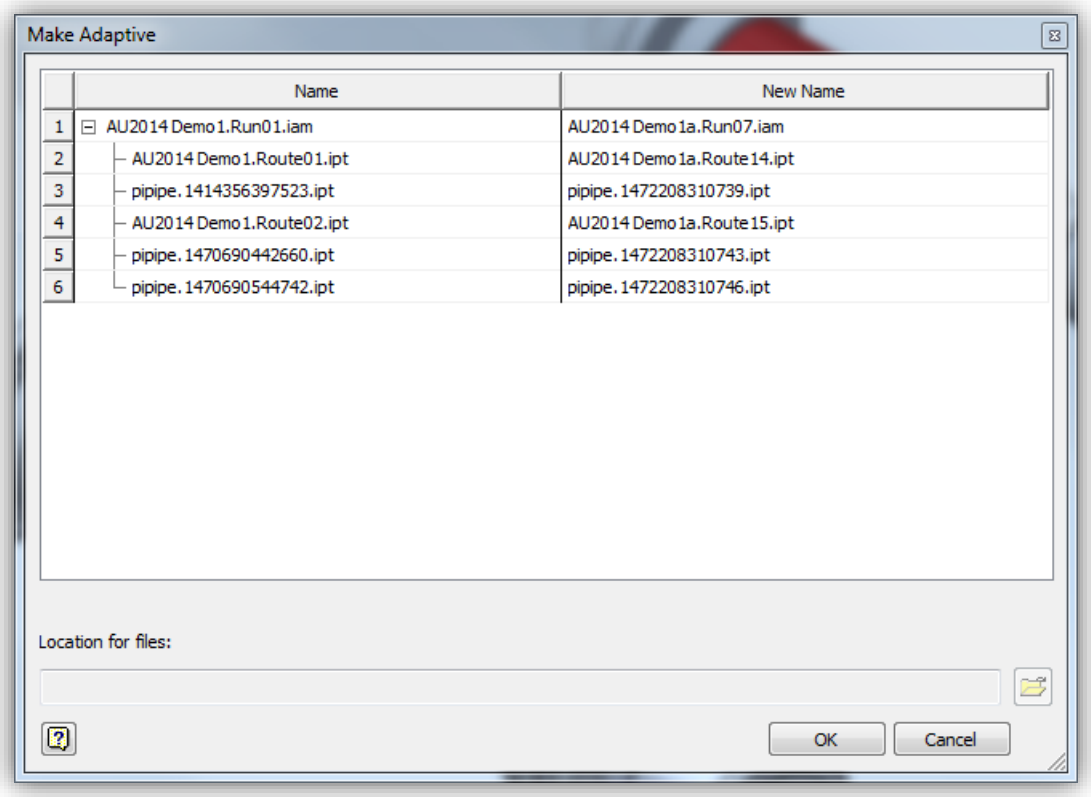

Copy & Re-use

4. Copy & Re-use Pipe Runs – Part Deux – Split a pipe run (Presented by Mark L)

For this section you will learn how to take an existing pipe run and split it into two (2) separate runs. This workflow is not a perfect solution and there are most likely other possibilities that can be used to accomplish this.

Our checklist:

- An assembly started in the tube and pipe environment
- A pipe run is already defined.

Things to know ahead of time:

- Must know how to copy and paste Inventor information
- Know how to make a copied pipe run adaptive
- Understanding of basic assembly constraints
- Working with the visibility of components
- Must know how to changing BOM structure of components at assembly level

- Understand how to manipulate a pipe route and break it apart

Getting Ready

Sometimes when you're designing your pipe runs you may not always be thinking about what is feasible as a pipe run when it comes to manufacturing process. In a design review it may be necessary to go back and split a pipe run in order to have it manufactured properly. So do you want to redo the entire pipe run or have the ability to split the existing information?

Basically the information or workflow already shown in part 1 is the foundation for this workflow or:

- Activate the Master Pipe Run level.
- Copy and paste (onto the screen) the pipe run that needs to be split in 2 sections
    - At this point the copied pipe run is just another occurrence of the pipe run assembly and technically not an official routed system pipe run.
- Make the copied pipe run adaptive
    - Define and save the necessary files to make this pipe run adaptive

At this point the first thing you will do is to constrain (flush constrain) the original and copied pipe run using the three (3) origin work planes of each pipe run.

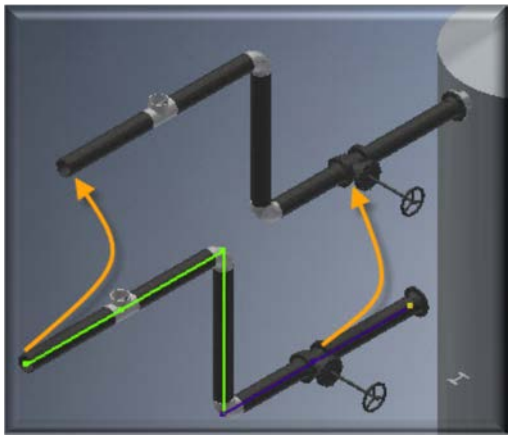

In the end, the two (2) pipe runs should reside on top of each other and now you need to:

- Determine where the split will occur in your pipe run.
- Turn off the visibility of the copied pipe run so you can solely work on the original one.
- Expand the original pipe run and edit (activate) the related pipe route.
- Insert a node to the left or right of the split point.

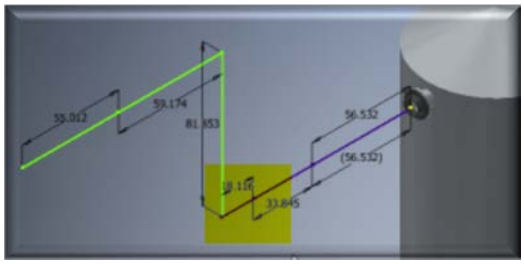

- This node is used to split apart the route in order to remove the routing information that's no longer needed after the split.

- Remove any restrictive dimensioning to the node and properly dimension the placement of the node.
  - The location of this node is not crucial. However, it must be placed to ensure there's still enough distance to create a small section of pipe after the split point and the related piping components.
    - Remember your pipe style and the min pipe length segment that you have defined regarding this node placement.
- Remove all route information that is beyond the node point.
  - It is important that you don't delete any pipe segments or piping components of the pipe run. We will work on controlling these items later on.

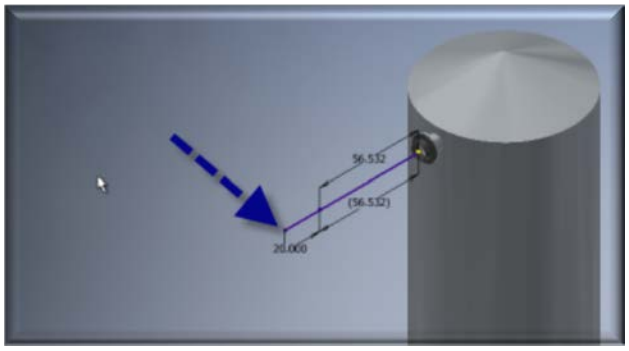

Activate the Master Pipe Run and open the original pipe run assembly. At this level, you will need to set the BOM structure (right mouse click in browser) to REFERENCE for the remaining piping components and small segment of pipe that occurred after the split. Since we are not actually removing these components, this step is vital so these components do not appear in any BOM. Next you will need to turn the visibility of those same components to off so they too don't appear in any piping details that you may make from this pipe run.

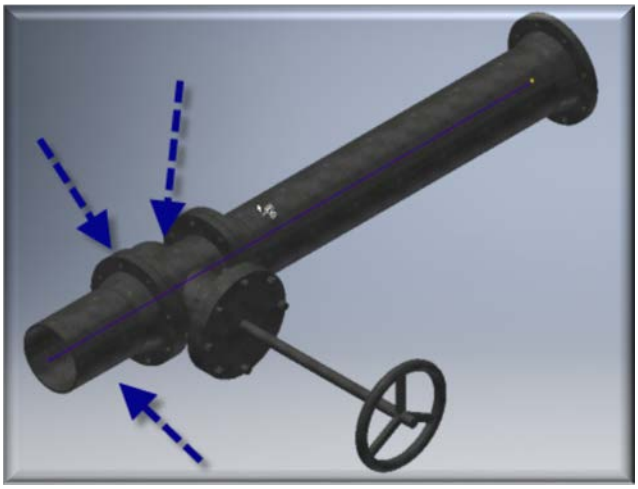

Exit the pipe run assembly and accept the message about not having the ability to save the assembly at this point. When you return back to the main routed system model, you will notice the visibility of those components (that you changed) still appear in the overall routed system model. You may elect to turn the visibility of those components off at this level or leave them as is.

Now turn the visibility off for the original pipe run and on for the copied one. From there, repeat the same steps that you did on the original one pipe run. When finished, turn on the visibility of the original pipe run to complete the split workflow.

The following link provides a tutorial video in how to split a pipe run into two (2) separate pipe runs.

Split a Pipe Run

5. Filling Gaps in a Pipe Run (Presented by Chris Benner)

This section covers methods for repairing broken pipe lines, and using these breaks to modify tricky designs.

Breaking and then Connecting a Pipe Route

From time to time as you are designing with Tube & Pipe, a situation may come along where you have done everything right, but somehow you find there is a gap in your pipeline. I have seen this happen under a wide range of circumstances, and by the time you see it, it is usually too late to understand how it happened in the first place. One example I use to demonstrate this is where two pipelines of different specs come together. One of the fittings is placed using assembly constraints, not tube & pipe, in order to ensure proper alignment with equipment.

At the junction of these two pipelines, is a valve. This valve needs to be removed, as the design criteria changed. However, because of the way the two lines were constructed, the route cannot heal itself when the fitting is removed, and I end up with a gap between the two lines. The first image shows the line as it was routed, followed by an image showing the line with the valve removed. You can see the remaining gap where the pipeline did not heal itself.

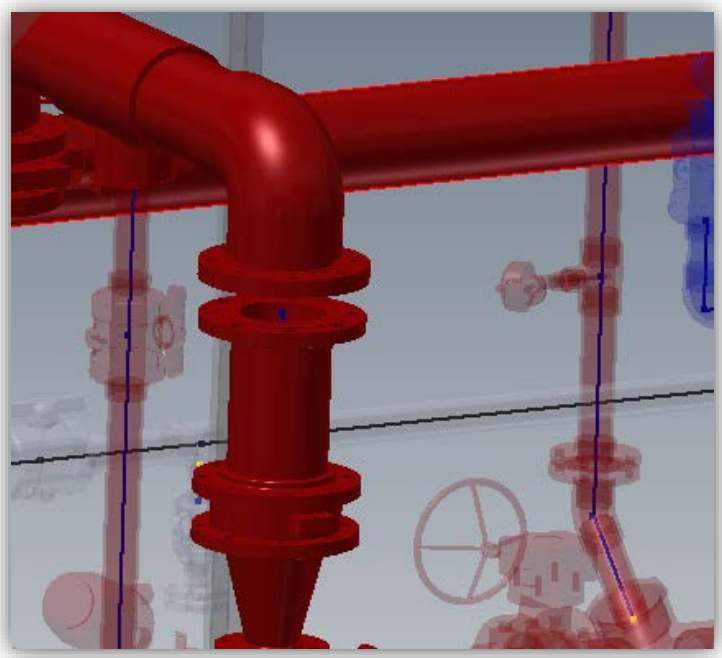

To repair this, regardless of the cause, find the route that contains the gap and edit it. Once in the route editor, I change the dimension of the line to shorten it. Be aware of your minimum pipe length settings. In this case I made it 6” long. The next step is to add a route segment from the top flange, downward toward the end point of the lower segment, but not connecting. Then strip all dimensions off of the two segments.

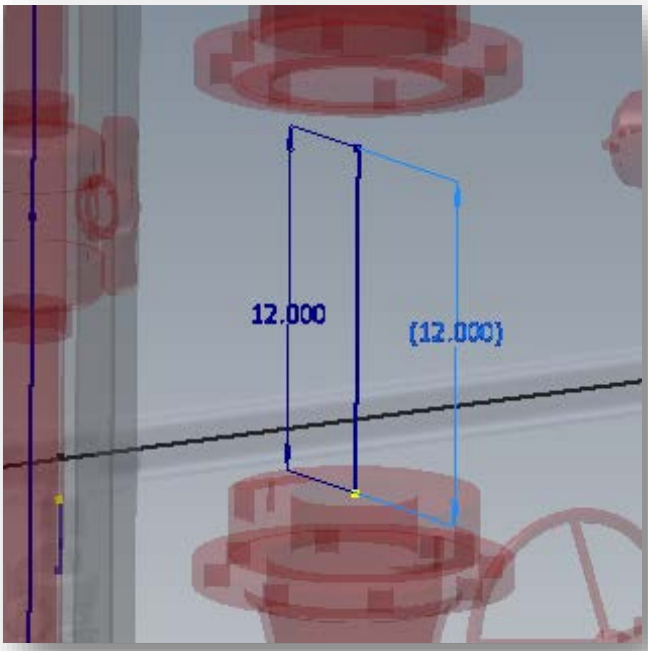

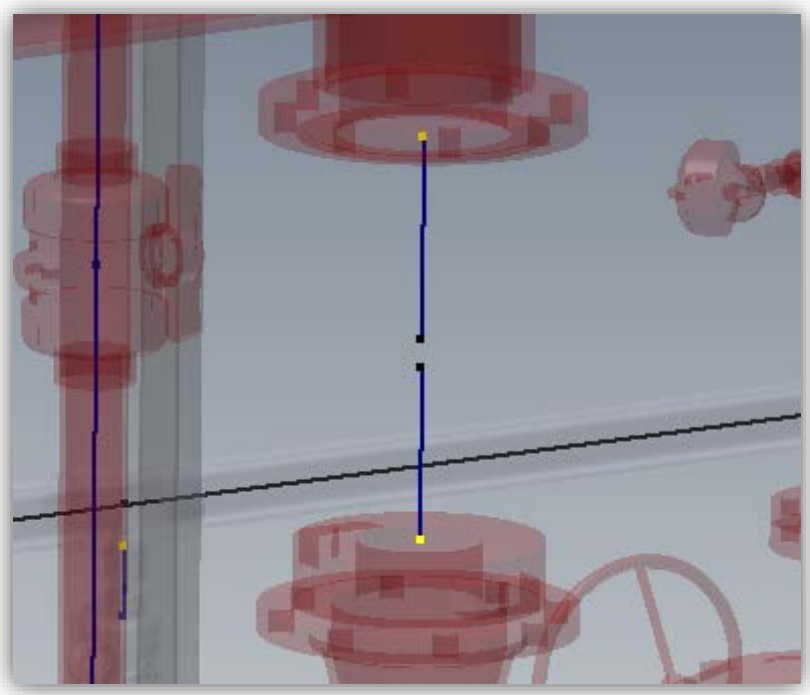

Next, from the route menu, place a coincident constraint connecting the two endpoints of the segments, so that you have a single segment with a node point where the two ends meet.

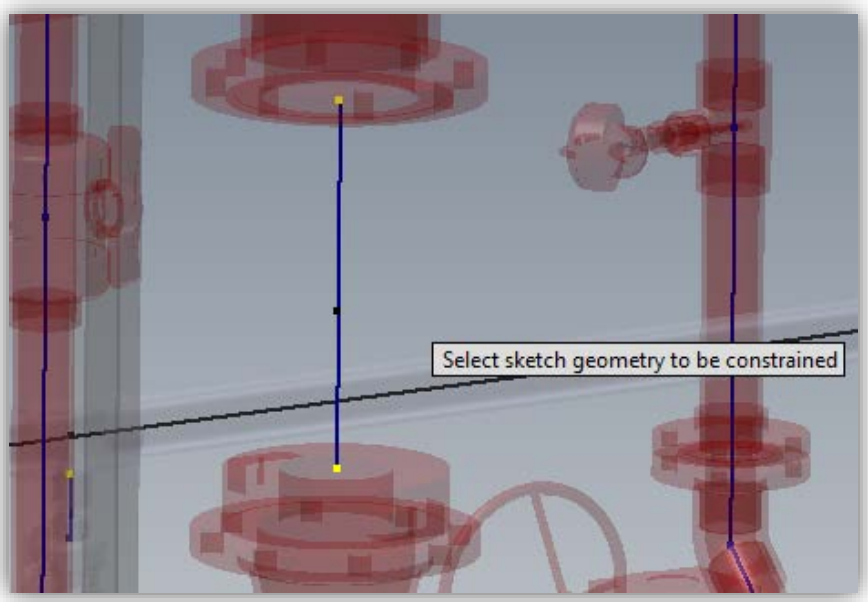

Finally, select the node point, and from the context menu, delete it. Tube & Pipe will automatically place a reference dimension on the newly created single segment, and you're ready to finish. Once you return the route repopulates and the gap is filled in.

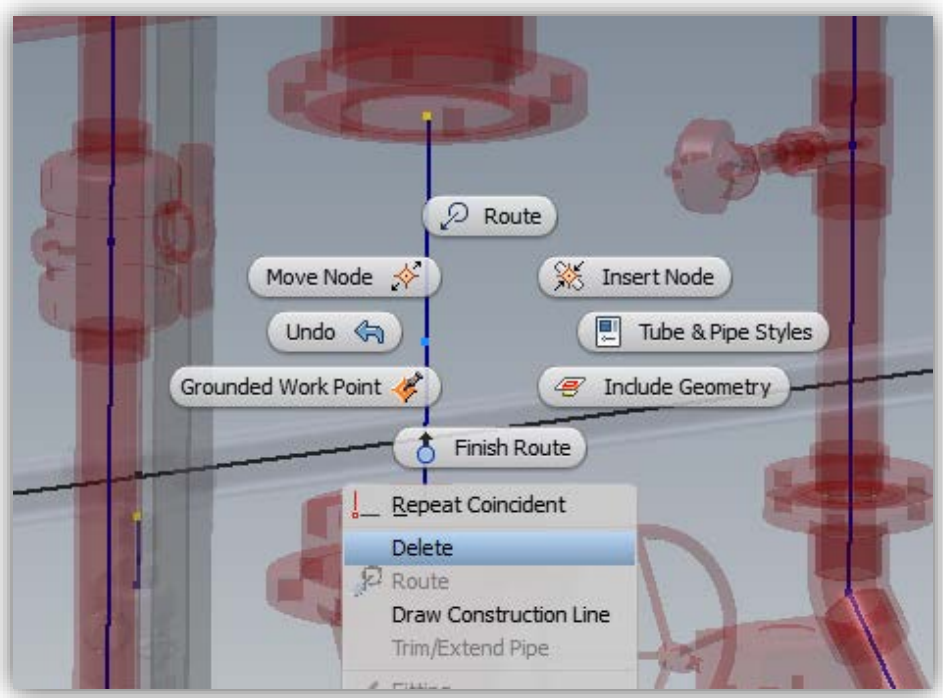

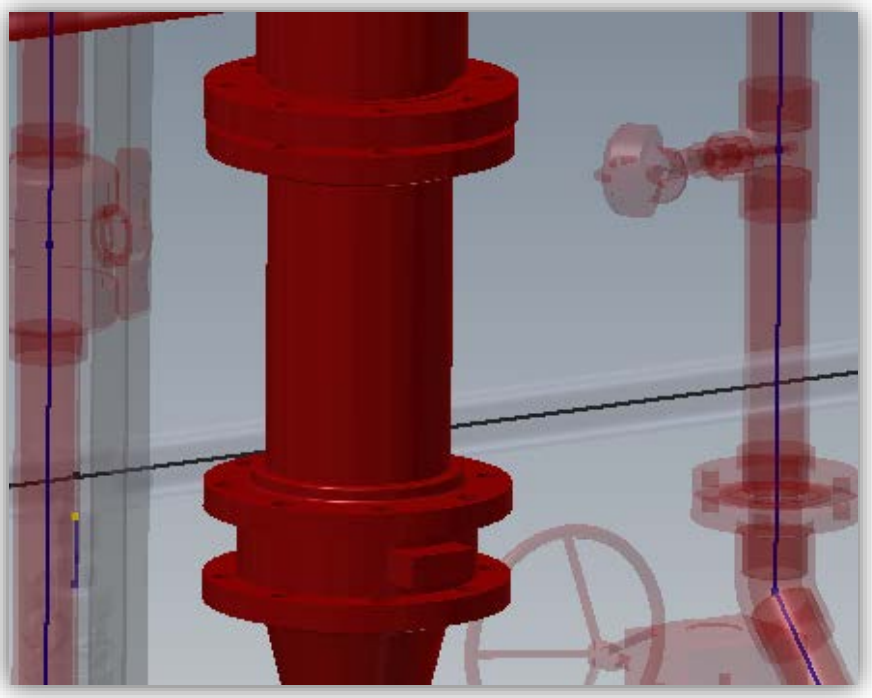

Again, the causes of this type of challenge can vary, and may sneak up on you just when you think everything is working fine. But the solution is always the same. Often, I use this in order to purposely break a pipeline, in order to accomplish a specific design change, and then reassemble it later.

This technique is detailed in this short YouTube video:

Close Gaps in Pipe Run

6. Quick Placement of Pipe Fittings (Presented by Chris Benner)

The primary tool used to add fittings to a pipe route, is the “Place” tool. This is found on the Pipe Runs tab of the ribbon.

This tool takes you to the Content Center where you must navigate your folders until you find the fitting you are looking for, and then select the correct instance from the Family table. If the fitting you need is already in use, anywhere in your assembly, there is a much quicker way to insert another instance of it. First, and I cannot stress this enough, never, ever ever use Copy and Paste in a Tube & Pipe assembly. Ever. This can cause serious problems later, such as not being able to delete any extra fittings that you pasted. Instead, use the tool found next to Place on the same ribbon tab: Place Fitting.

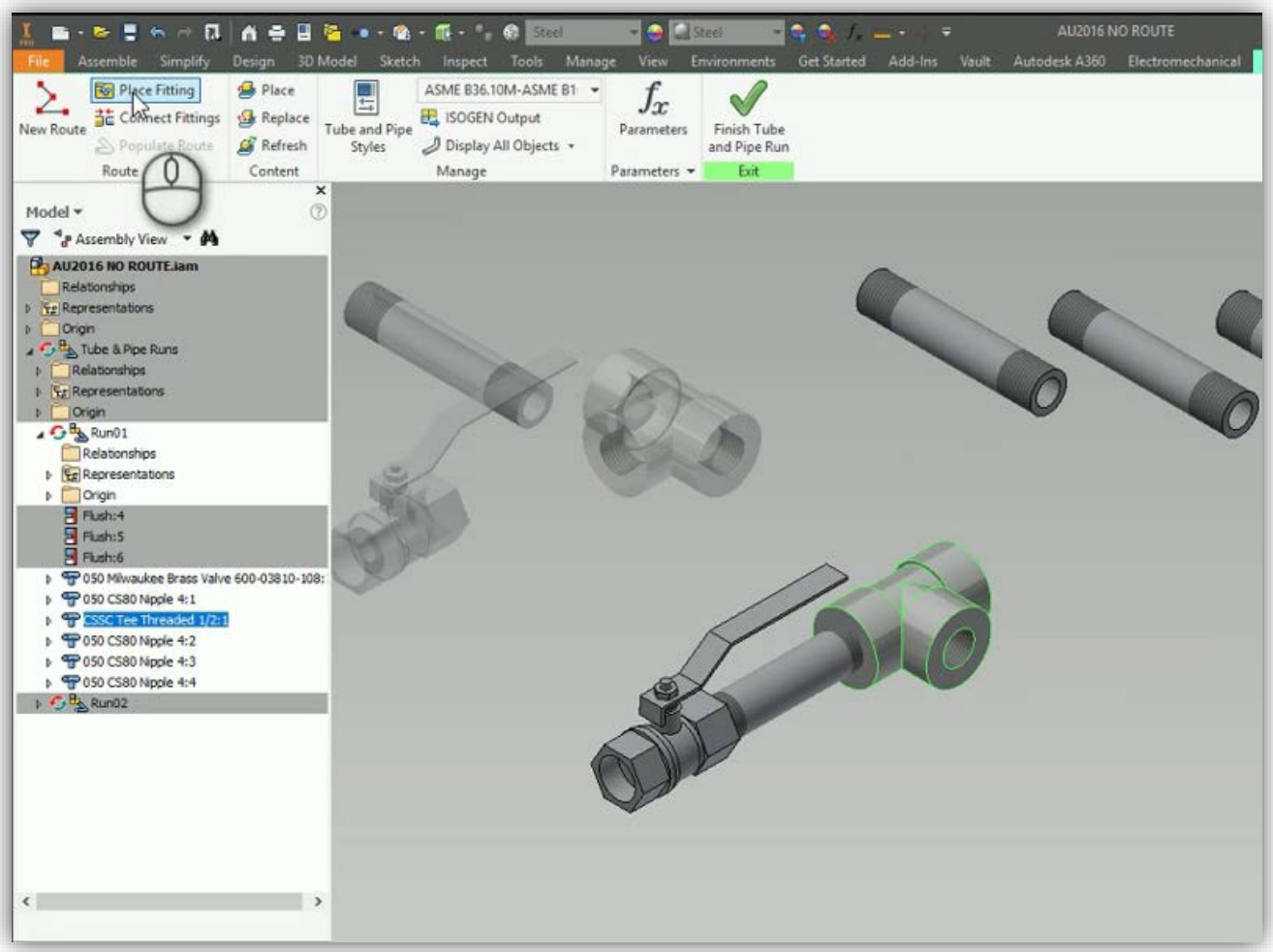

This tool, selected directly from the ribbon, will take you to your file paths, local or network, instead of the Content Center. It is what you would use to insert a fitting that has been authored, but not published. However, if you can see the fitting you need on your screen, or even in your model browser, simply highlight the fitting to pre-select it, and then use the Place Fitting tool. This will instantly place an instance of the fitting you selected, in the size you selected, into your currently active model. To select fittings on the screen that are not part of the currently active assembly, Shift-Right Click on the screen and set your selection priority to Part. For pipe designs where you tend to use a lot of the same fittings, valves or instruments, this is a nice quick way of adding them to your design, while avoiding the extra mouse clicks of navigating your Content Center

Here is a link to a very short video demonstration of the Place Fitting quick placement.

Quick Placement of Fittings

7. Aligning Fittings across Different Pipe Runs (Presented by Mark Lancaster)

In this section we will discuss how to align fittings between two (2) separate pipe runs.

Our checklist:

1. An assembly started in the tube and pipe environment
2. 2 separate pipe runs. One run should have at least a piping tee defined in it.
3. Defined Tube and Pipe styles

Things to know ahead of time:

4. Understanding
    a. Difference between a run and route
    b. Not being able to interact with other runs while modify another run
    c. Navigating the Inventor Browser tree or pane
    d. Clearly knowing which routed system level you're working at.
    e. Working with routing tool and routing options
    f. Controlling the route dimensions
    g. Works on unpopulated/populated routes
    h. Other methods are possible.

Getting Ready

When working with routed systems, you realize really quickly that it's not always easy to route between separate pipe runs. When one run is active, there's no possibility of interacting with any other (separate) pipe run. So how do you align a branch in one route with another?

Besides having two (2) separate pipe runs and routes, the workflow is very simple and straight forward. Here's how you accomplish this:

- Activate the pipe run that has the tee or branch in it.
- If not already present, create a work axis through the center of the branch.

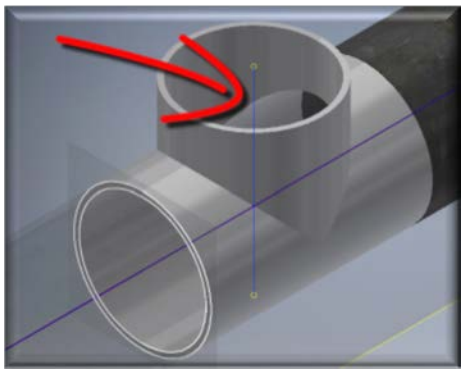

- Create a work plane that goes through the axis (of the tee branch) and parallel (0 DEG) to the end of the tee/branch.

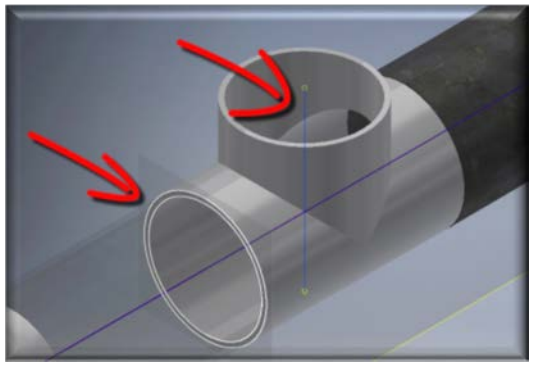

  - In order to see the end of the tee you may need to disable the pipe segments that butts up to the tee/branch.
- Activate the pipe route in the other pipe run.
- Place a node on the route in the route segment that will host the tee

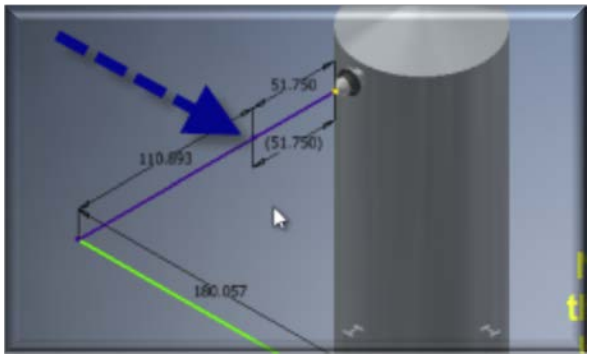

- Remove all dimensions associated to the node.
- Select “Include Geometry” and select the work plane that we created in the other pipe run/tee.
- Create a coincident constraint between the node and the work plane that was included in the routed.
- At this point the center-line of this tee is now aligned with the tee center-line in the other pipe run
- Exit this route and route between the runs as required.
  - Don’t forget to convert those “Auto-Routes” to sketched routes.

Here’s a video demonstrating how to align fittings across different pipe runs.

Aligning Fittings across Different Pipe Runs

8. Pipe Runs with No Routes (Presented by Chris Benner)

From time to time, you may find the need to assemble a pipe run that contains no routes, and no actual pipe segments. These “fitting to fitting” pipe runs can still be assembled using the Tube & Pipe tools, but do offer a few more challenges. The advantage to using tube & pipe to create these pipe runs, versus using standard Inventor assembly methods, is the ability to use fitting connections and orientations to quickly assemble and modify your pipe run, without having to manipulate potentially dozens of constraints. The downside is that it can be harder to “flip” fittings, and may require the full disassembly of at least a portion of your pipe run to make certain changes.

The technique for this is very simple. Within your Master Pipe Run, create a new Pipe Run like you normally would. But you will not need to create any routes, or assign any tube & pipe styles. From this point, you can simply start placing components from your content center or other fitting libraries. These fittings may be connected as soon as they are inserted into the assembly by right clicking while placing and selecting the “connect” option. In the next section we will take an in-depth look at the “connect” option and a few other “apply fitting” workflows.

In this method, however, if you have several instances of the same fitting you will need to return to the Content Center several times or use the Quick Place options mentioned earlier. Another option is to place fittings from the Content Center and drop several instances of them onto the screen all at one time, leaving them unconnected. Once you have enough fittings to work with, you simply use the Connect Fittings command from the Tube & Pipe ribbon and start putting the pipe run together.

As mentioned above, one of the challenges with this assembly technique is that it can be difficult to flip a fitting in the line. In a standard pipe run with a route and pipe segments, flipping a fitting is as simple as using Edit Fitting Orientation, and then pressing the space bar. In this method, however, both fitting connections must first be broken. The fitting can then be reconnected in the proper orientation. Where it becomes challenging is that, the downstream fitting connections must also be broken, sometimes all the way to the end of the pipe run, and then reconnected one by one. In Inventor 2017, in order to help with this known tube & pipe limitation, Autodesk added a context menu option “Delete all Connections” to break all pipe run connections with one pick. This does not solve the problem, but at least saves a few mouse clicks in the process. A more permanent solution is, hopefully, forthcoming and is the subject of at least one Inventor Idea Station post.

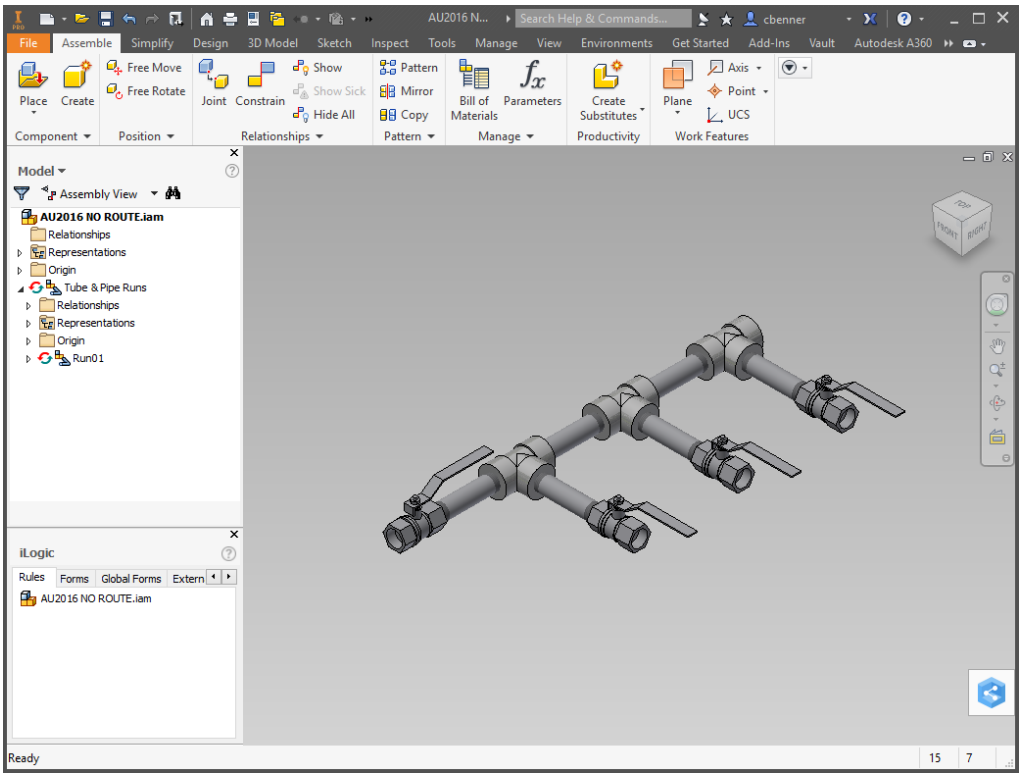

Routeless Pipe Runs

9. Apply Fittings Methods (Presented by Mark Lancaster)

In this section we will discuss different types of workflows and helpful tips when applying piping fittings to your routed system model.

Some of the items that we will be covered are:

- Flip direction of a fitting while placing it on the pipe run.
- Connect fittings to other piping components
- Connect fittings to other modeling components (without the need to constrain or even before a route is started)
- Insert piping components between other piping components
- Adjust/editing piping connection information
- Drag & Drop replacement method

Here is a link to a video demonstration different methods of applying fittings to your pipe runs.

Apply Fittings Methods

10. Self-Draining Pipe Runs (Presented by Mark Lancaster)

In this section we will discuss how to create a pipe run that is self-draining.

Our checklist:

1. An assembly started in the tube and pipe environment
2. Defining gravity in the model
3. Matching self-draining elbow authored for tube & pipe and published to the content center.
4. Defined Tube and Pipe style with slope information.

Things to know ahead of time:

5. Gravity direction must be defined up front. A change in the direction will impact existing styles and most likely cause style conflicts.
6. The starting and ending node of the first route segment must always be collinear (parallel) to the direction of gravity or it will violate the rules.
7. A corresponding self-draining elbow matching the slope information (per the style) must be present in the content center.
8. An overall self-draining pipe run may have numerous routes, but it is only permitted to have a self-draining style defined for the routes.
9. Once a route is started with a self-draining style it can't be switched to a normal Tube & Pipe style. Same holds true if you started a normal pipe route, it can't be switched to a self-draining style.
10. Limited capabilities
11. Auto-route may be unable to find solution
12. Direction change of self-draining slope is permitted but violates rules

Getting Ready

Self-draining piping runs are crucial in certain types of filtration's environments. Without them contaminations, bacterial, virus, and other "nasty stuff" would collect over time and end up in the overall product (and who wants that).

Although Inventor provides for self-draining lines, its limited capability may not be what's required for your type of filtration/process. Self-draining in Inventor Routed System is based on a simple rule, downward slope is always based on the direction of the defined gravity. Meaning a given pipe run segment cannot have a slope going in 2 different directions.

Start by opening your routed system model and activate the overall Tube & Pipe assembly. Select "Define Gravity" and select the related information to define its direction.

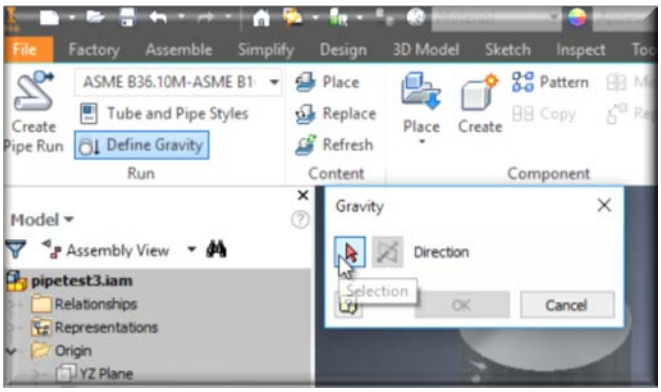

Most likely you will need to define your own self-draining style, but one is already provided (ASME BPE – BUTT WELD) in the routed system template. When defining the style, I recommend that you define the slope information up-front before you assign any of the related piping components.

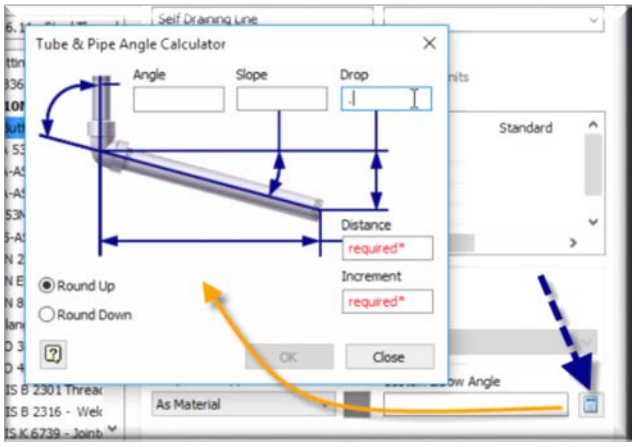

Once the style is fully defined you can start routing your pipe run.

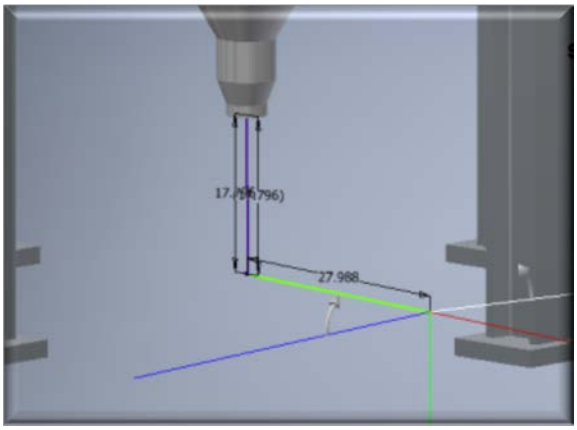

Although slope directional indicators are provided to switch the slope direction, in doing so you will cause a route violation and a message like this will be issued.

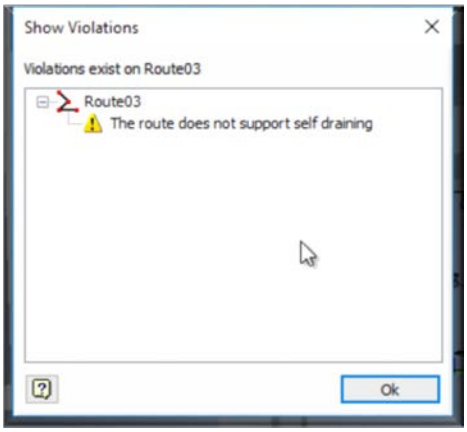

Here's a video link demonstrating how to create self-draining pipe runs in your model.

Self-Draining Pipe-Runs

11. Lines with Cut-Back Elbows (Presented by Mark Lancaster)

In this section we will discuss how to create a pipe run that requires modified elbows that are not at a standard 45/90 DEG or also not considered to be self-draining.

Our checklist:

- Inventor 2017 – Preferred Version
- A blank part file with a BOM structure set to REFERENCE.
- An assembly started in the tube and pipe environment
- Route layout determining our cut back angle
- Cut-back (modified) elbow
    a. Authored for Tube & Pipe

    b. Optional: Published to the content center
    c. Radius value at the centerline of the elbow
- Pipe routed started and assigned piping style.

Things to know ahead of time:

- Working with 3D Sketches/Inventor 2017 3D Sketch updated environment.
    a. Pre-2017: Additional steps needs not covered here.
- You will be managing a separate part file that holds the 3D Sketches
- Understanding what a derived route is.
    a. At least 3 separate routes are needed for this solution
- Not a perfect solution
    a. Other work flows are possible
    b. You may elect to create the 3D Sketch as adaptive
    c. May not fully update if things change

Getting Ready

One of the new features in Inventor 2017 is the enhancement to the 3D sketching environment. This update allows the user to work more efficiently in a 3D Sketch and makes it easier to incorporate a “derived route” into a routed system model. But this workflow is not a perfect solution and there are other possibilities for this type of piping configuration. This workflow is being shown as an alternative method and/or to demonstrate how you can “derive” 3D sketches into your routed system model.

When it comes to your cut-back elbows, you may not know ahead of time what its modified angle will be until you layout out your piping needs. That’s fine, but the point I wanted to make here is that the modified elbow doesn’t need to be published into content center in order for this to work. Pipe runs with cut-back elbows are probably not a common thing and you’ll need to ask yourself do I want to spend time publishing these type of modified elbows to my content center. My recommendation is to store them in a common company library and use the “Place Fitting” function at the pipe run level. But whatever you decide, these modified elbows still must be authored for Tube & Pipe in order for this to work.

To begin you need to create/save a blank part that has a BOM structure (Tools/Document Settings/BOM tab) set to REFERENCE. In your routed system model, place this blank part into your model at the top level assembly and constraint it. I recommend that its constraints are based on the origin work-planes between the part and the overall assembly. Once the blank part has properly been constrained, you will edit it (edit-in-place) within the assembly to create the related 3D sketches. Depending on your requirements, you most likely will start by “included geometry” in your 3D Sketch to have a starting point to work from.

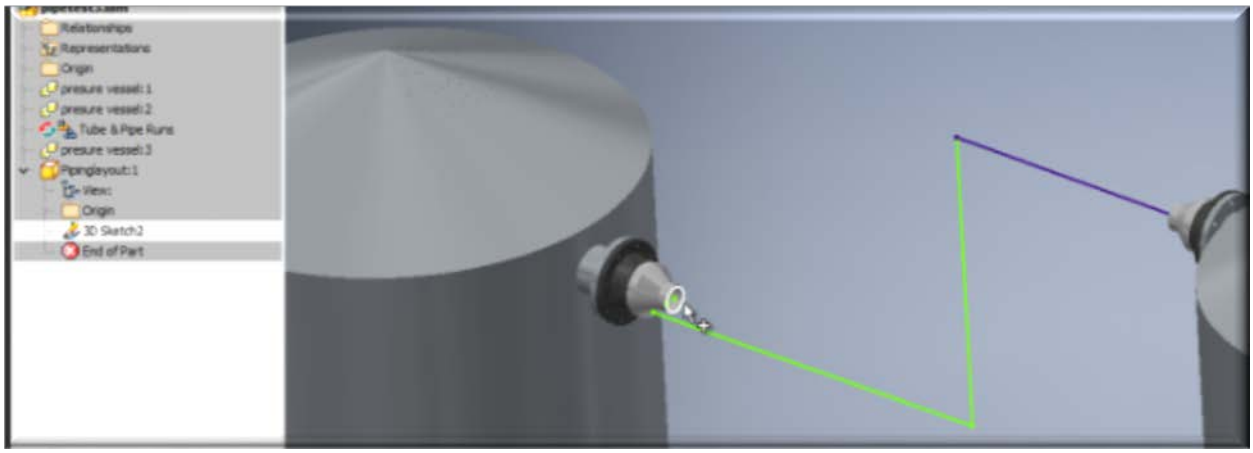

The included geometry for your 3D Sketch can be based on existing model features and/or routed lines that are part of your pipe run that has the cut-back elbows. From there you will create the required 3D Sketch that represents the layout of your cut-back portion of the pipe route. Also don't forget to include the centerline radius of the elbow (you're using) in your sketch. This is needed later on to determine the placement of your modified elbows and the lengths of the required pipe segments.

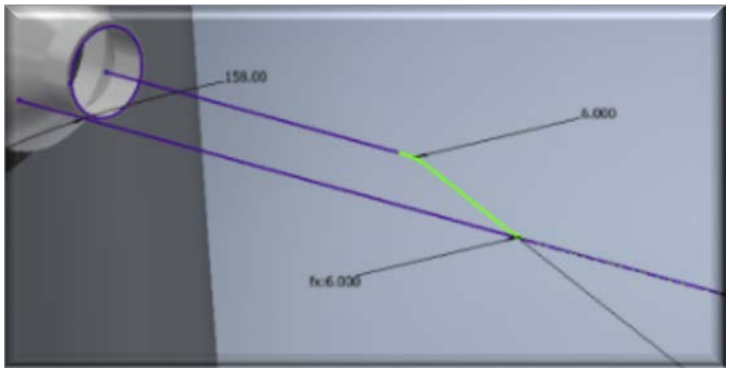

Return back to the Tube & Pipe level assembly and activate the pipe run that will contain the cut-back information. From there you will start another pipe route using the "Derived Route" function.

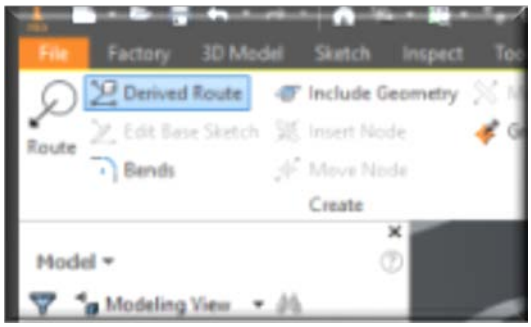

The derived route will solely be based on the single (3D Sketch) line that's located between the 2 fillets/radius representing the cutback elbows in your pipe run. As a reminder, the default selection method for derived routes is "Entire Sketch", so you must right mouse click and toggle the selection to "Single" select mode. The other key when working with a derived route is to make sure you always right mouse click at the end and select "Done" so the start and end points of the selected 3D Sketch is transferred into your pipe route.

Now that your pipe route has the proper nodes assigned to it…

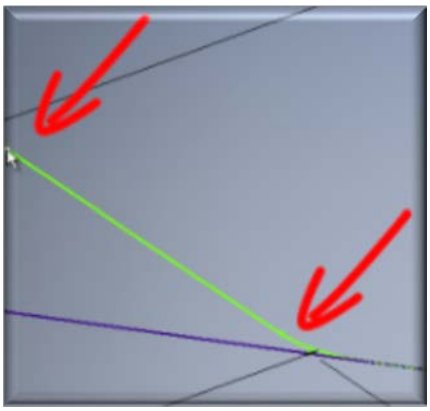

Toggle over to the pipe run level and place (using the "Place Fitting" function) the cut-back elbows onto those nodes and orient them as needed.

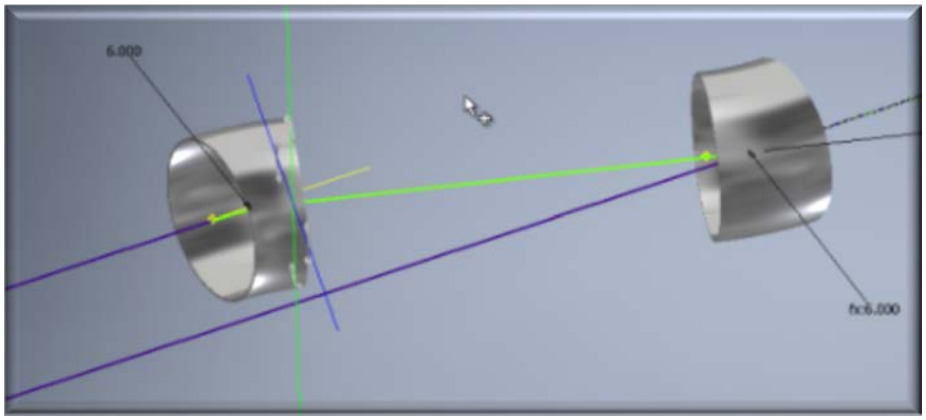

Once again depending on your pipe layout… You will then create a new pipe route to connect one of the cut back elbows to the unfinished end of your pipe run.

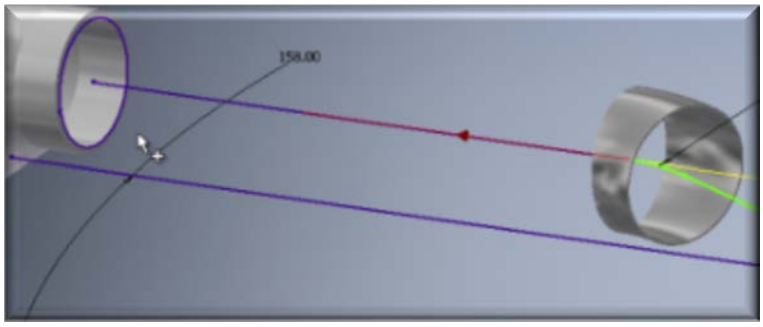

Don't forget to convert those "Auto-routes" to sketched route configurations!!! From there you may need to adjust the first pipe route dimensions so its final segment length is connected to the first cut-back elbow that was placed.

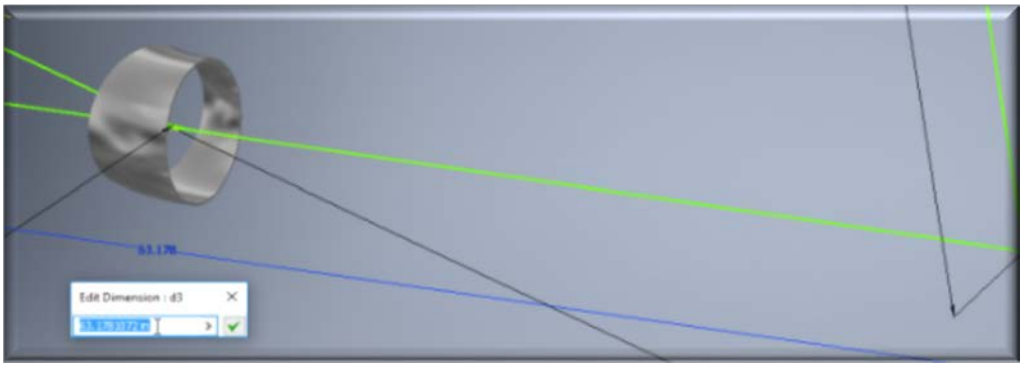

Finish the pipe run by populating all of the necessary routes and don't forget to turn the visibility off for your 3D Sketch (pipe) layout.

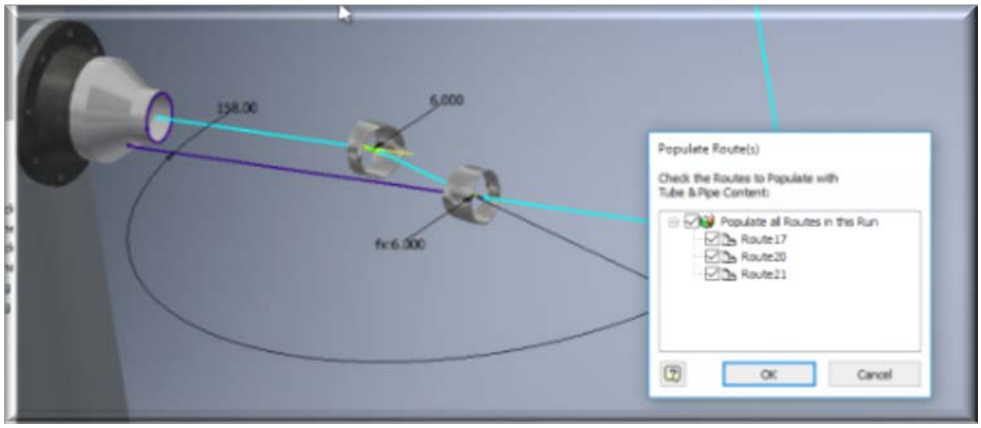

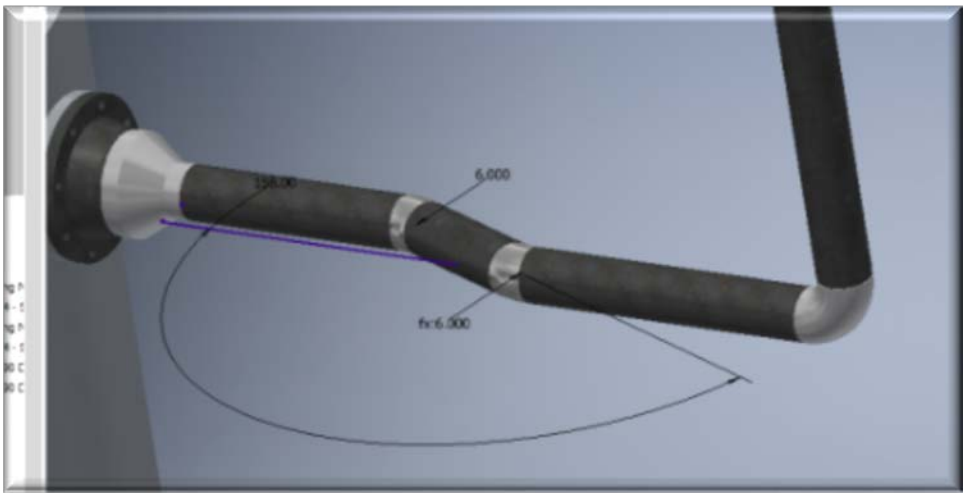

The follow link is a video demonstrating how to create pipe runs with cut-back elbows.

Lines with Cut-Back Elbows

12. Authoring Tips

Although we are not covering authoring workflows in our live session, we wanted to share some crucial information about authoring your piping components.

Authoring, it's all in the details…

Certain users may agree with this topic and others may think it's not necessary. However in my opinion, adhering to strict details when authoring is essential and it will most likely eliminate the issues user have come to see when authoring and working with tube & pipe styles.

Nominal Size Parameter:

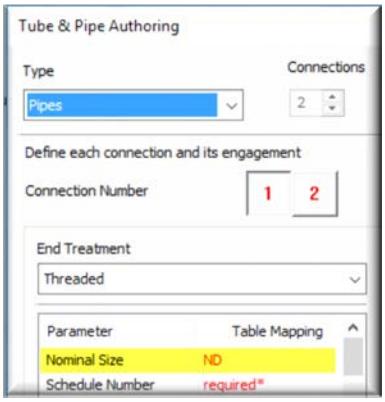

When laying out an iPart table that will be used to author and publish my piping component to content center, I've always used the designations as of ND, ND1, ND2, ND3, and etc to denote the "Nominal Size" parameter. This parameter is usually created under the "Other" tab of the iPart table.

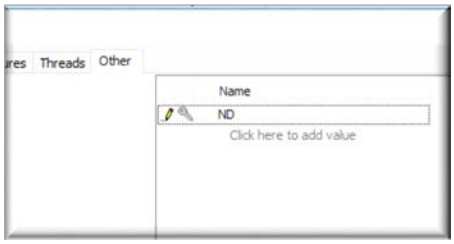

- ND: For non-reducing style components or when all the connection sizes of the component are the same
- ND1: For reducing style components and defined as the largest connection size for your component.
- ND2/ND3: For reducing style components and defined as the next connection size or the smallest for your component.

Although I've always used the "ND" format, there's no set rules stating it must be ND, ND1, or etc. However, this value should be entered in the following format based on the given imperial sizes:

Pipe (NPS), Tube OD, Hose OD	ComponentSize ConnectionSize ND/ND1/ND2	Pipe (NPS), Tube OD, Hose OD	ComponentSize ConnectionSize ND/ND1/ND2	Pipe (NPS), Tube OD, Hose OD	ComponentSize ConnectionSize ND/ND1/ND2
1/4	1/4	3	3	18	18
3/8	3/8	3-1/2	3 1/2	20	20
1/2	1/2	4	4	24	24
3/4	3/4	5	5		
1	1	6	6		
1-1/4	1 1/4	8	8		
1-1/2	1 1/2	10	10		
2	2	12	12		
2-1/2	2 1/2	14	14		

When working with metric sizes, the value must start with an **M**, followed by the actual metric diameter of the pipe (for example M40). For example, a DN65 tube has an OD of 70mm diameter, so ND would be set to M70 and not M65 or

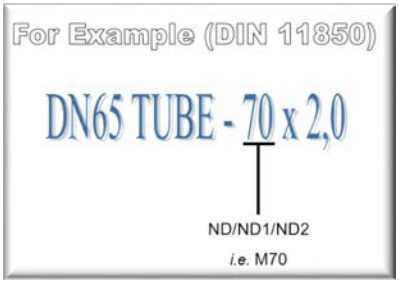

Schedule Number Parameter:

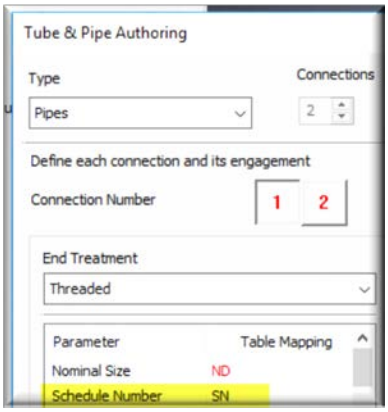

This authoring parameter (SN) is not always required for every authoring type, but no matter if it is required or not, I've always added this parameter in my iPart table under the "Other" tab.

If there's a related pipe schedule, enter the actual schedule (i.e. 40) for it and for all other cases, enter the actual (larger) pipe (or tube) line size (i.e. 1.315).

The iPart table format:

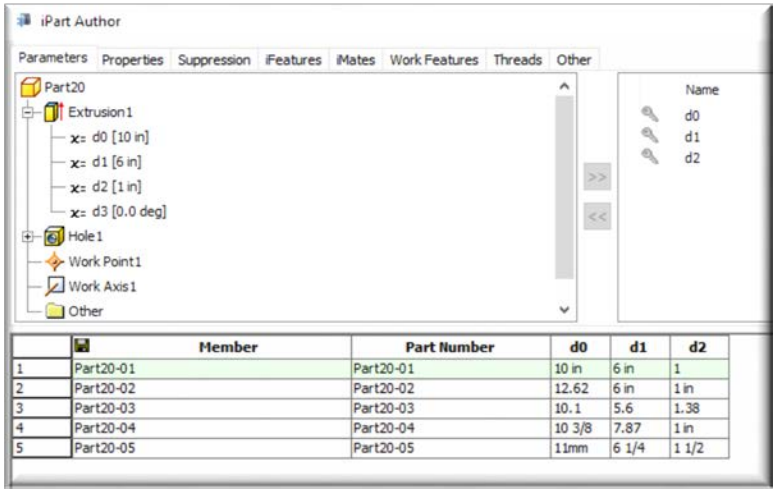

	Member	Part Number	d0	d1	d2
1	Part20-01	Part20-01	10 in	6 in	1
2	Part20-02	Part20-02	12.62	6 in	1 in
3	Part20-03	Part20-03	10.1	5.6	1.38
4	Part20-04	Part20-04	10 3/8	7.87	1 in
5	Part20-05	Part20-05	11mm	6 1/4	1 1/2

Looking at the above image of an iPart table, do you see any issues with the values associated to d0, d1, and d2? Some may answer "Yes" and others will say there's nothing wrong with it. When it comes to authoring and working with tube & pipe styles, the format of the iPart table is crucial. The example above is formatted with numerous configurations/formats and will most likely cause an issue if this piping component ended up being applied to a tube and pipe style.

The point I making, is to have a standard and stick with it. Don't combine different formats and unit of measurements in your iPart table. If you are going to apply the unit of measurement, then all related values/cells should have that same unit of measurement. All dimensional entries in an iPart table must be consistent. I've always gone by this simple rule: Cell (dimensional) values must be based on a scale of 1:1, nominal value, correct precision/not rounded, and not per any min/max tolerance. In addition, if a dimension is 5 3/8 and you're working with decimals, you should be entering it as 5.375 and not 5.38. Same holds true for 5 9/16, it is not 5.56, it's 5.5625.

How far to go with an iPart table…

When I first started learning about authoring of piping components, I was doing most of the member work in the iPart table prior to authoring and publishing it to the content center. Then after a few you realized that it's not really necessary to do this and you can simple create an iPart table of a single member and finish the rest while editing the (content center) family table. Although this method worked the best for me, it really doesn't matter if you define the members at the iPart table level or while editing the content center family table.

Saving the master…

After a piping component is modeled, its iPart table created, authored, and published to the content center, the Inventor part file that was used is no longer really needed. However, I've seen too many times this file is never saved and/or is deleted. In my opinion, this file is your master, and if anything happens with the family template in content center you have nothing to fall back onto. So, treat these extra files as though they are crucial to your design and keep them safe and protected.

To Break or not to Break (well Cut)…

Years ago when I taught co-workers how to author piping components, I started out by talking about how a piping component will break or cut the pipe line. So what do I mean by this?

When you break the pipe line, you are basically doing this:

Piping components that you will be authoring will most likely fall under this category and when you go to author them, you simply define the two (2) points that will cause the break to occur. Something like this:

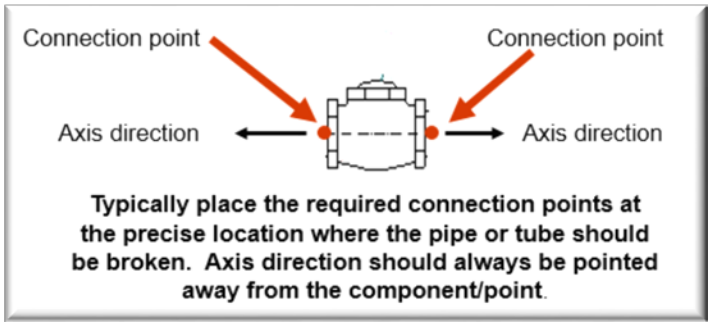

As a side note, additional authoring points (for example, think of a piping tee) will be needed for the other connections as well. Components like certain instrumentation may only contain a single authoring point.

When you cut a pipe line, you are cutting a hole profile somewhere in the pipe run and the pipe run is not actually broken. Basically you're applying a certain type of piping component such as o-let, saddle, branch or something like this:

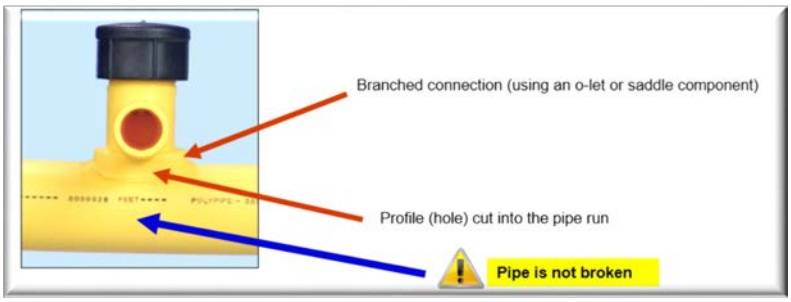

When it comes to these types of branched connection, the authoring steps are not always clear and many times they are not authored properly. Here are some key bullets to remember when authoring these types of components

- A branched connection must always have at least two (2) connections defined or always one (1) more than the actual number of branches
- Connection #1 is defined as the branched connection or the largest branch connection
- The final connection authoring is based on the information that will be used to cut the pipe run:
    a. Mating point: Defined where the branch mates with the pipe (or tube) run
    b. End Treatment: Set to Other
    c. Define the mating point, pipe axis, and the optional cut information.

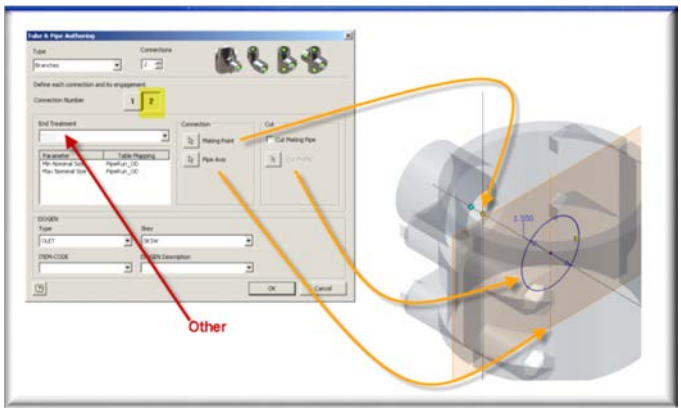

- The point for the mating and the sketch representing the cut information must already reside in your piping component prior to authoring it.

Know-it-all aspect, why not author it like that?

The CAD group I used to manage a few years back had a couple of pipe designers that knew a lot about process piping and piping components. When they created models they knew exactly what had to be done with most of the components. But when it came time to authoring such information, they always left out the crucial items in my opinion. When I asked why they didn't, their response was "*Why do I have to put all this extra information in when I know it?*"

The point I trying to make here is, you may fully understand what's required but what about the next person or the new person who just hired? How do you convey this design information to those folks? Here's a couple of examples of what I'm referring to.

Example #1: In this example, a valve designed for food and beverage processing required a certain amount of clearance above the product in order for the actuator cover to be removed and the internals accessed. One pipe designer may know about this requirement but another may not know and run a pipe run right over the top of it. In the end to make things easier we

added a surface representation and an engineering note to the valve so that everyone would understand the clearance it needed.

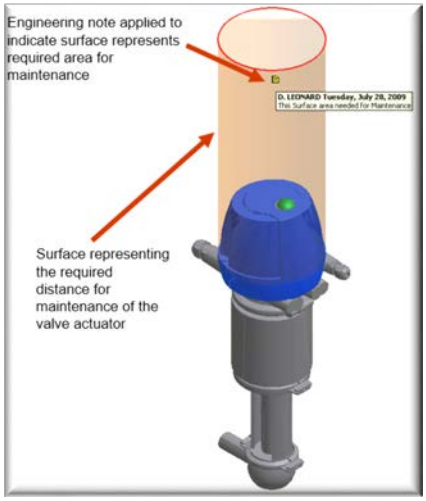

Example #2: With the following component, the flow arrow, iMates, engineering note, and a surface representing the required piping clamps was also included in the authoring. So whenever this component was placed onto the pipe run each user knew the flow direction it needed and that it required two (2) pipe clamps as well to support it.

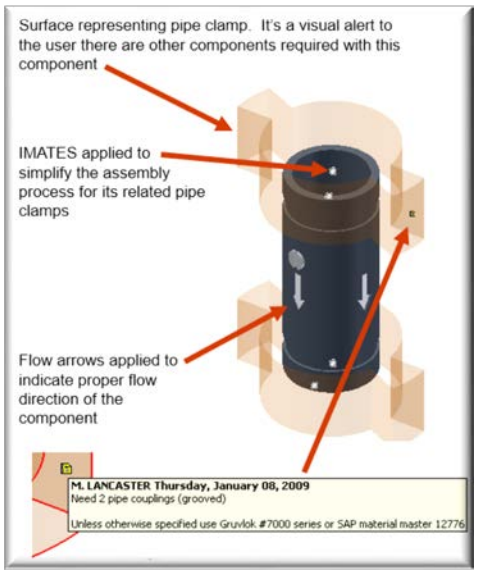

In the end put your knowledge into your authored piping components and make things easier for everybody.

13. Bill of Materials (BOM) Tips

Pipe Segment Part Numbers

Starting with Inventor 2016, you have the ability to control how a pipe segment part number is populated. In the past, the part number field was always left blank. With Inventor 2016, you have the choice to use the part number that is defined already in content center, assigned based on the pipe segment actual file name or left empty/blank (default value) as it was in previous versions of Inventor. To control this, activate the Master Pipe Run (assembly) in your browser, right mouse click on it and select Tube & Pipe Settings.

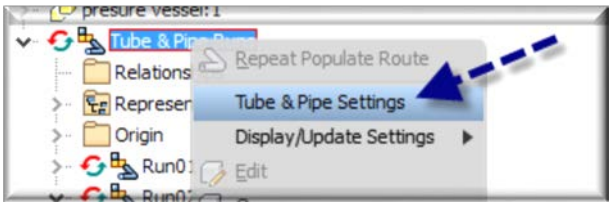

Under the Tube & Pipe Settings, select Prompt for conduit file names and Enable Part Number Settings.

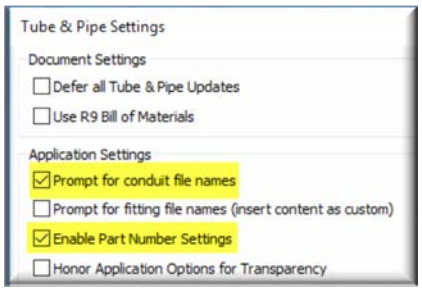

The problems with using this setting are:

- This is a global setting and acts like an on/off switch. This information is written in the registry and is not stored based on a given model. However, if changes are made mid-stream, existing pipe runs are not impacted.
- In order to control the part number setting, you first have to enable prompting for conduit file names and thus another dialog box you have to click through just to set the part number option.

Single or multiple BOM lines for pipe segments?

When it comes to the actual Bill of Materials or parts list, each company has their own method in how this should work and appear. For a routed system model you have the ability to combine all like pipe segments into a single line item or have a row for each cut segment. So what does your company prefer, or maybe you need to show both ways.

A BOM line item for each cut pipe segment: This method is the easiest to accomplish because it's already done for you when you create the model.

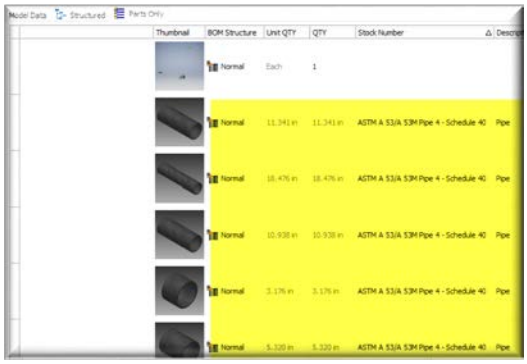

A BOM line item showing overall length for like pipe segments: For this aspect we need to have the same part number for each like pipe segment since we are using the option to row merge on part number match.

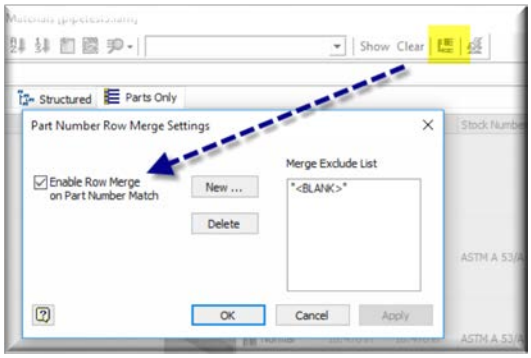

Next you'll need a common designator in the part number field for like pipe sizes so they will merge together as one-line item in the BOM. Opening and modifying each individual pipe segment IPROPERTIES is a choice, however it's much easier to accomplish this task through the top assembly BOM function. Here how to accomplish it:

- Activate the top assembly.
- Select Bill of Materials located on the Assemble ribbon tab.
- If not enabled, select Parts Only (Disabled) tab, right mouse click on it and select Enable BOM View.
- In the part number column, start entering the common designator that will be used. If you want to use the information from the stock number column or any other column, copy and paste from cell to cell.
    - As you enter the common designator or paste into the part number cell, the actual pipe entry will disappear from the BOM view and roll-up into the BOM line item (row) having a yellow highlighted Unit Qty/*Various* cell

- Also as change occurs, the part file is automatically being updated at that instance. Meaning, if you make a mistake there's no "undo" method to correct it unless you disable row merge on part number.
- If the stock and/or description cell (field) ends up being highlighted for grouped liked pipe sizes, this is a strong indication that you have combined wrong line items together. To correct this, you need to disable the part number merge option, correct the problem and then enable the merging option again.
    - No addition steps required if the revision cell is highlighted for a given grouped liked pipe sizes

Are you required to show both methods?: For the top assembly I would have the BOM set to part number row merge and for the individual pipe runs, I would have part number row merge disabled to show a line item for each pipe segment.

14. In Closing…

We both hope that we were able to provide at least one small piece of information in this class that you found helpful. Many more of our tips, and those of others, can be found throughout the Autodesk Community, including the Autodesk Knowledge Network, Screencast and in the forums. Also be sure to look at all of the great videos on You Tube, put out by users like us and yourselves. Thank you!