MSF21457-L

Revit Fabrication Parts—Design to Spooling Lab

Ralph Schoch
Victaulic

Learning Objectives

- Learn how to set up and import a Fabrication CADmep Configuration for Revit.
- Learn how to convert a design model to Fabrication Parts
- Learn how to efficiently make coordination and design changes.
  Learn how to create assemblies and schedules (Spool Drawings).

Description

Learn to take a Revit design model thru to fabrication spools exemplifying the advantages of using a singular model.

Your AU Expert

Ralph Schoch is the Revit, Technology, and Internal Support Manager in the Construction Piping Services Division (CPS) at Victaulic, a leading manufacturer of mechanical pipe-joining and fire protection systems. For 20 years he has been devoted to 3D piping system layout and design for global projects large and small. His interest in 3D modeling software led him to begin developing content for Revit in 2009. Ralph develops Revit families and add-in applications that allow engineers and contractors to design piping systems within Revit using Victaulic products. These families and tools have been used around the world from engineering to construction with full fabrication from the Revit model. In addition to Revit, Ralph has experience in Fabrication CADmep, Navisworks, Inventor, Solidworks, and Bentley Autoplant. He is a board member for the Lehigh Valley BIM Professionals Group and is a member of Autodesk Developers Network and Professional Member of AUGI.

Email: Ralph.Schoch@Victaulic.com

Website: www.VictaulicSoftware.com

www.Victaulic.com

What are Fabrication Parts?

Autodesk Fabrication – CADmep is an AutoCAD arx based software developed in the late 1980's by MAP out of Europe. It uses the same database thru its suite of products (FABmep, ESTmep, & CAMduct).

There are three basic elements to fabrication.

- Configuration/Database – contains connector, specification, & pricing information
- ITM files – Based off specific patterns developed by Autodesk (One pattern for all elbows, one pattern for all valves)
- Services – Define what products are placed when routing a specific system based on pipe size and material.

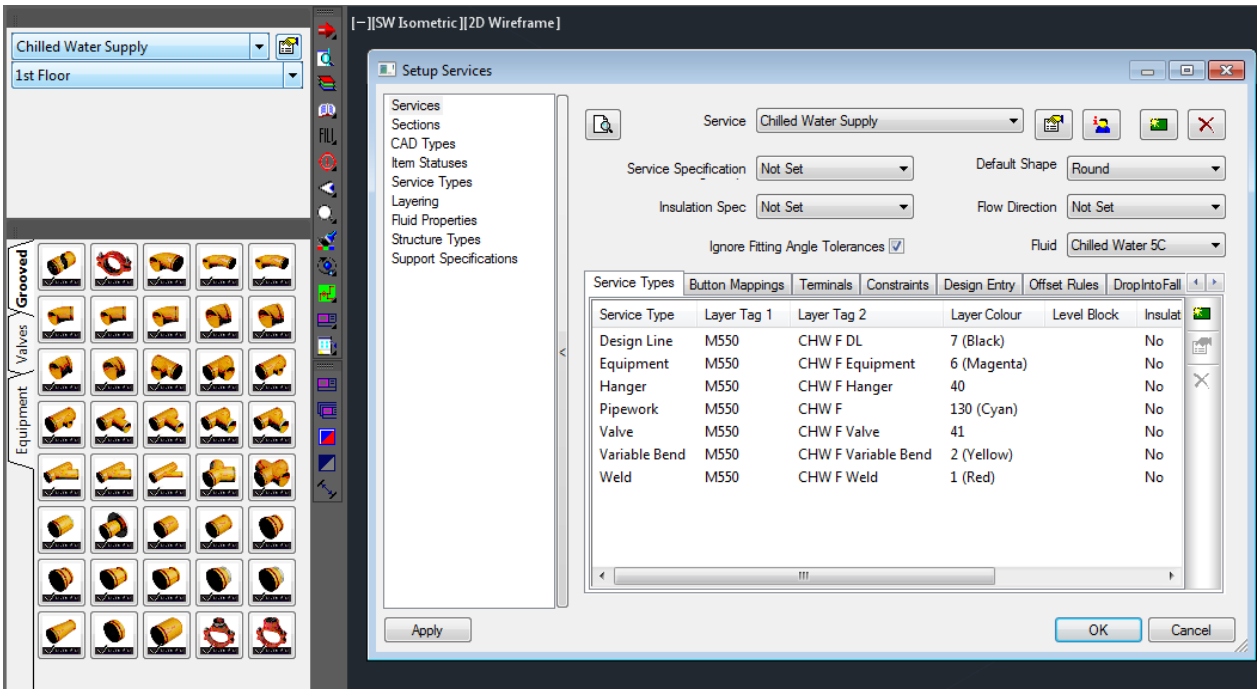

Fabrication Parts Setup

To be able to route with fabrication parts you need to have an Autodesk Fabrication database. For Revit 2016 if you don't currently own the Fabrication suite you will need to download the sample databases provided by Autodesk. By going to the link below you will have the ability to download an Imperial or Metric database.

http://knowledge.autodesk.com/support/revit-products/getting-started/caas/CloudHelp/cloudhelp/2016/ENU/Revit-GetStarted/files/GUID-12CF009B-3D4B-45D5-84C7-4EDEF2D8C52D-htm.html

New for Revit 2017 sample configurations are available during the installation of Revit. (Skip this step)

Home >

AUTODESK® REVIT® PRODUCTS

Overview | Getting Started | Learn & Explore | Downloads | Troubleshooting

Revit MEP Fabrication Sample Configurations

Like (0) Share

May 15 2015 | In-Product View

Applies to Revit 2016

Download sample fabrication configurations for use in Revit MEP.

The sample fabrication configurations contain generic US Imperial and UK Metric content.

Download the Imperial and Metric sample configurations

1. Click the file names: www.autodesk.com/revit-2016-mep-fabrication-sample-content-imperial and www.autodesk.com/revit-2016-mep-fabrication-sample-content-metric.
2. Open the files.

The files are installed to:

- C:/Users/Public/Documents/Autodesk/Fabrication 2016/Revit MEP Imperial Content/Vx.xx
- C:/Users/Public/Documents/Autodesk/Fabrication 2016/Revit MEP Metric Content/Vx.xx

Parent topic: Sample Files

Related Tasks

- Specify Fabrication Settings
- Place Fabrication Parts

Importing and Exporting Fabrication

To import or export fabrication parts you will need to download the Revit Extension for Fabrication. This can be found on the Autodesk Exchange Apps, see link below.

You will also need access to the Fabrication database that was used to create the model. This can be a sizeable task since a working database can be over 500mb and contains over 17,000 files. You can also find contractors will not freely provide this database as it contains trade secret information on how they fabricate their duct components and may represent years of development.

For this reason I would recommend the contractor to provide a Revit project with all the fabrication parts imported. Keep in mind that if you want to make changes to the fabrication parts layout you will need to have the fabrication database.

https://apps.exchange.autodesk.com/en

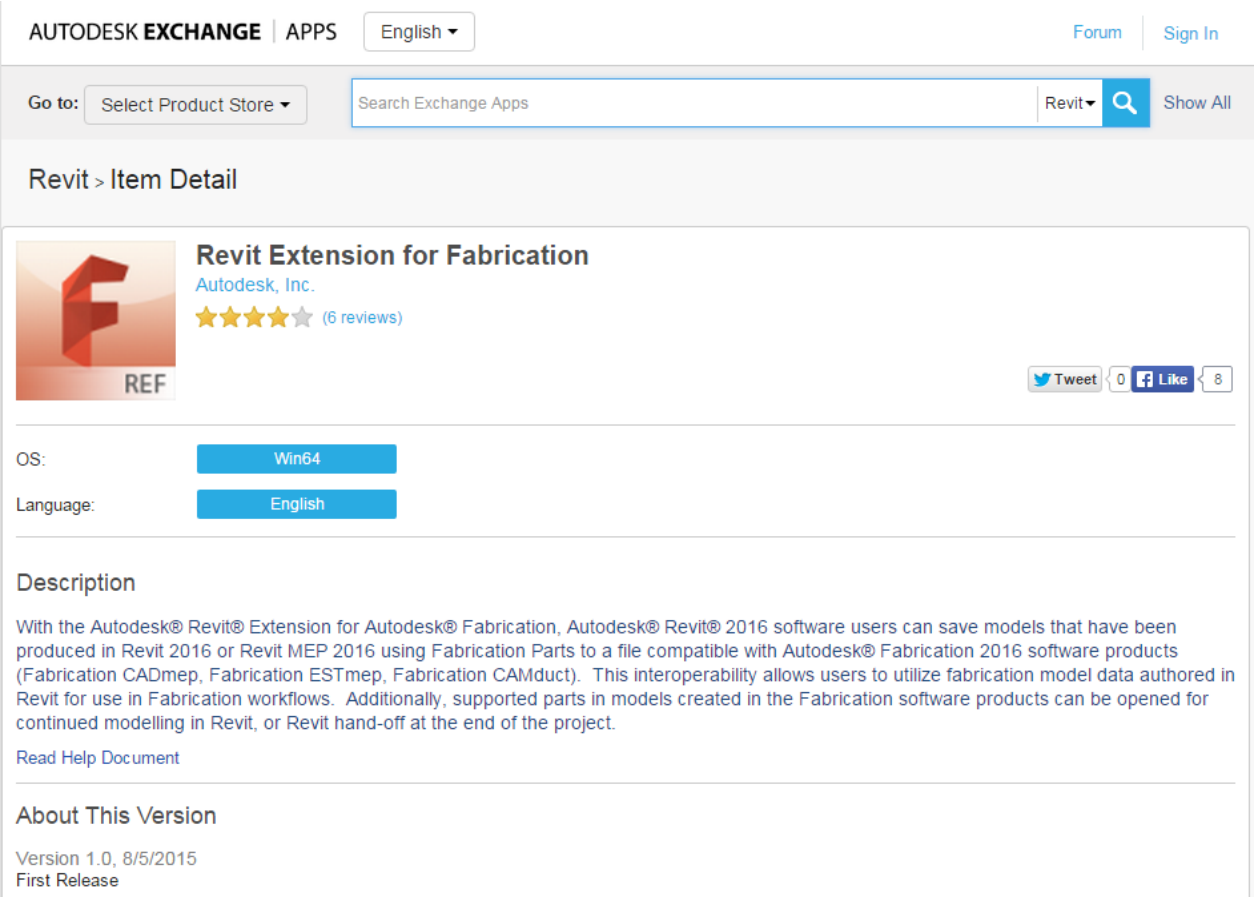

Available Parts

Search Autodesk Fabrication Parts Database

http://aec-projects.com/autodesk-fabrication/search-itm-content/

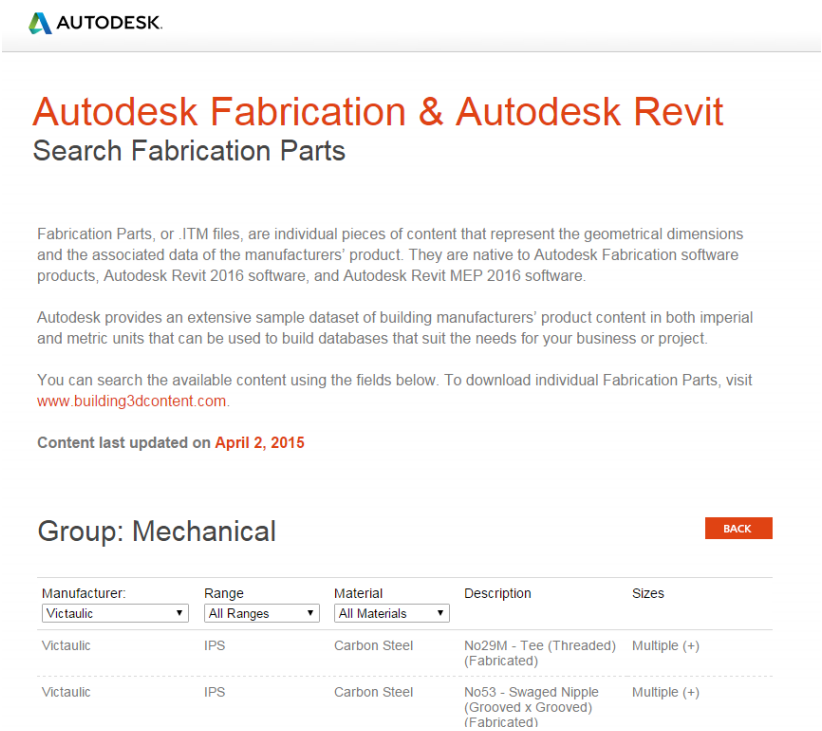

AUTODESK.

Autodesk Fabrication & Autodesk Revit

Search Fabrication Parts

Fabrication Parts, or .ITM files, are individual pieces of content that represent the geometrical dimensions and the associated data of the manufacturers' product. They are native to Autodesk Fabrication software products, Autodesk Revit 2016 software, and Autodesk Revit MEP 2016 software.

Autodesk provides an extensive sample dataset of building manufacturers' product content in both imperial and metric units that can be used to build databases that suit the needs for your business or project.

You can search the available content using the fields below. To download individual Fabrication Parts, visit www.building3dcontent.com.

Content last updated on April 2, 2015

Group: Mechanical

BACK

Manufacturer: Victaulic	Range All Ranges	Material All Materials	Description	Sizes
Victaulic	IPS	Carbon Steel	No29M - Tee (Threaded) (Fabricated)	Multiple (+)
Victaulic	IPS	Carbon Steel	No53 - Swaged Nipple (Grooved x Grooved) (Fabricated)	Multiple (+)

IEZ file are used to import content into your service using the fabrication software.

http://www.building3dcontent.com/

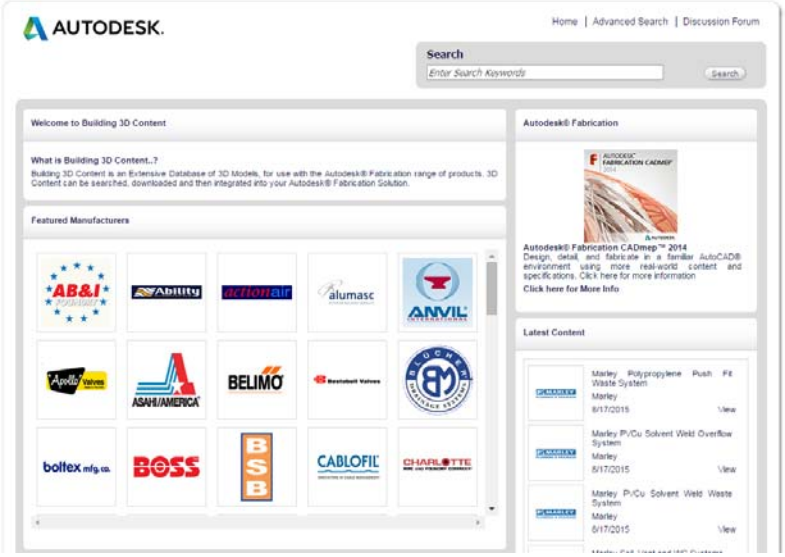

Accessing the Fabrication Configuration in Revit

Keyboard shortcut “FS” you will access the Fabrication Settings window, there you can select the desired fabrication configuration. Imperial and Metric configurations are available or load a customize company specific configuration. Note: To customize the configuration this is limited to the Fabrication software and not currently available in Revit.

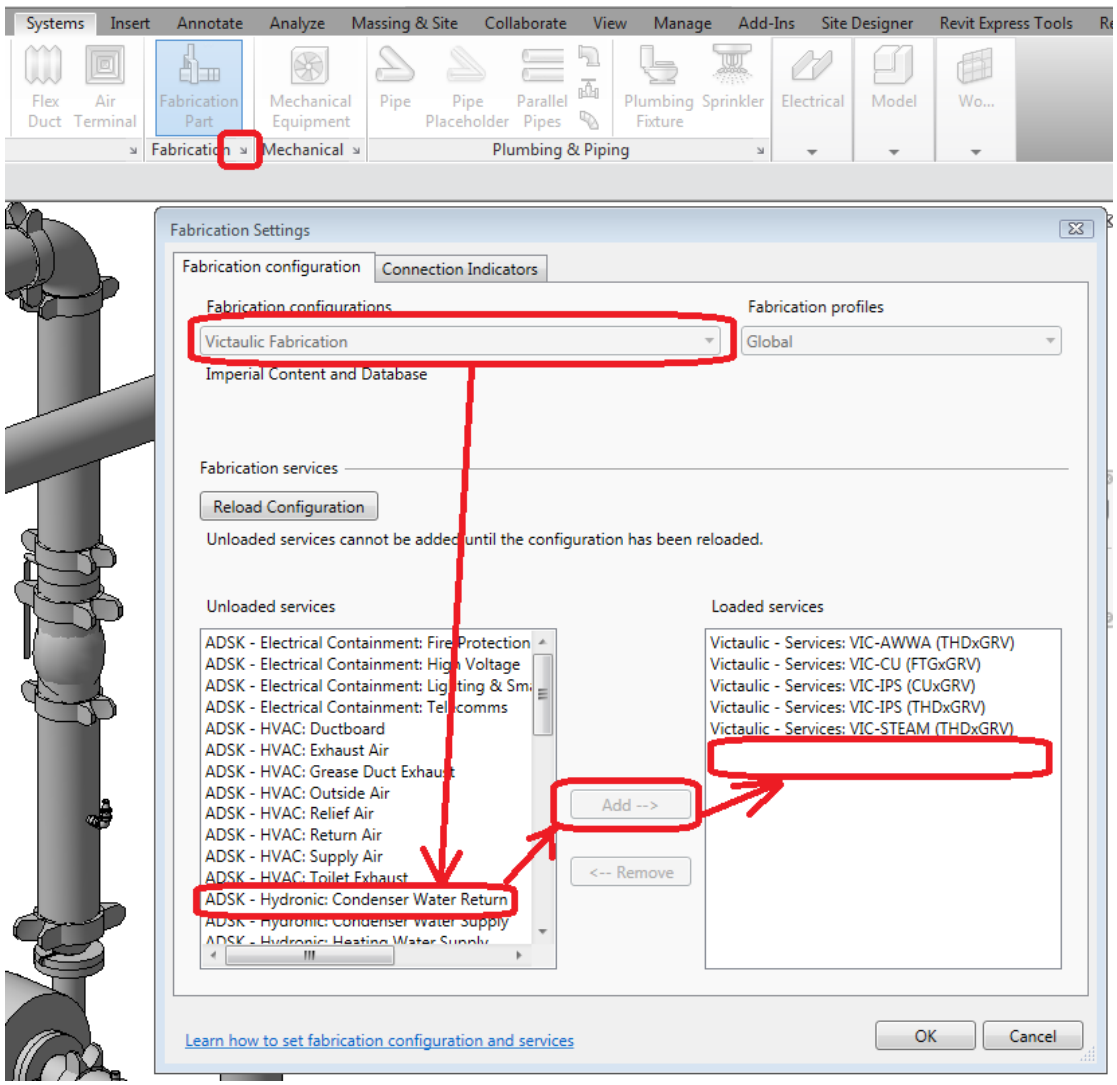

Placing Fabrication Parts

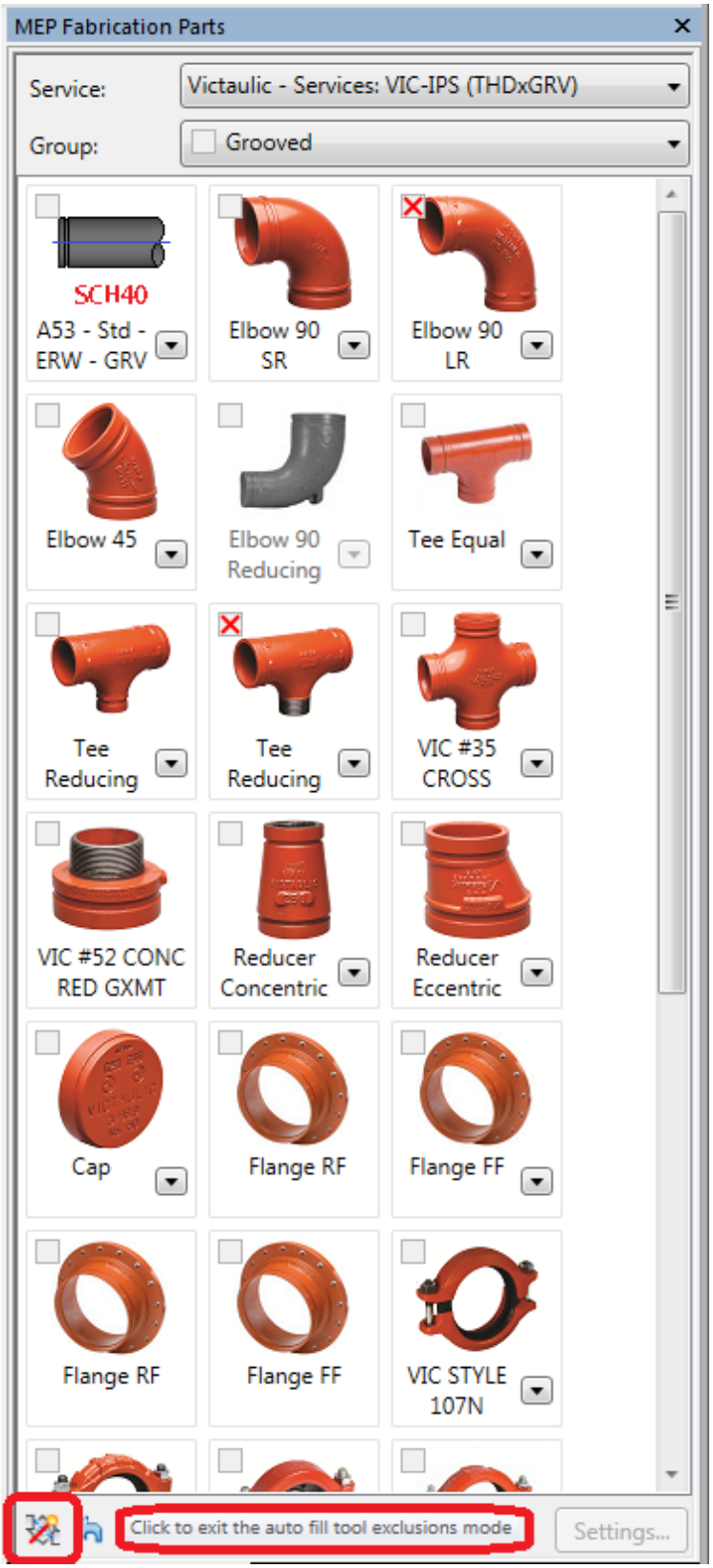

Using the keyboard shortcut “PB” the MEP Fabrication Parts palette will appear.

Select your desired Service and Group.

Now you can place fabrication parts using any of the parts buttons.

Notice some buttons have an arrow revealing addition parts available in the same button.

With Revit 2017.1 you now have the auto fill tool exclusions mode.

Design to Fabrication

Convert Revit design routings to fabrication parts by making a selection and you will see the Design to Fabrication button appear in the contextual ribbon. This also allows you to convert to fabrication parts.

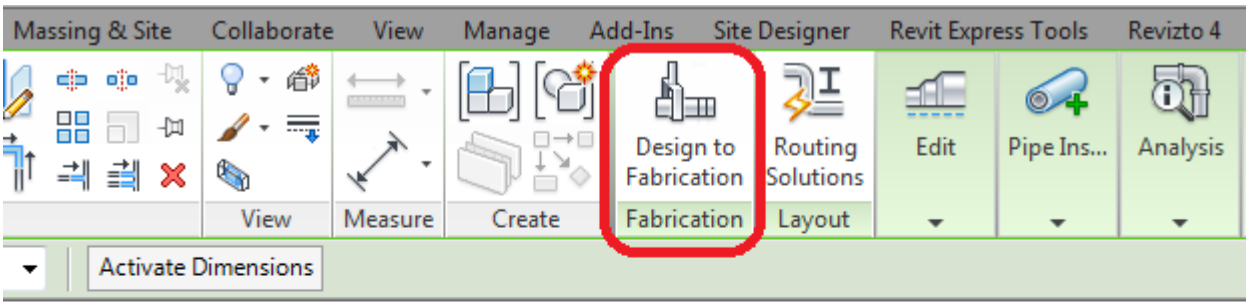

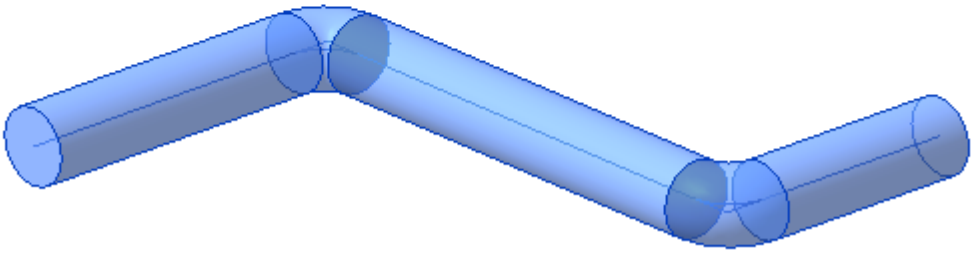

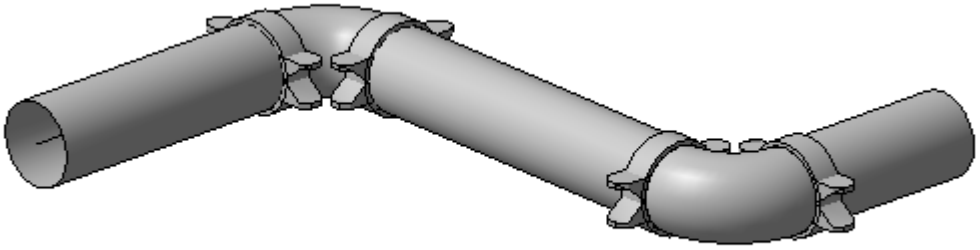

Fabrication Routing

Select a run of parts and have the option to Optimize Lengths and Route and Fill.

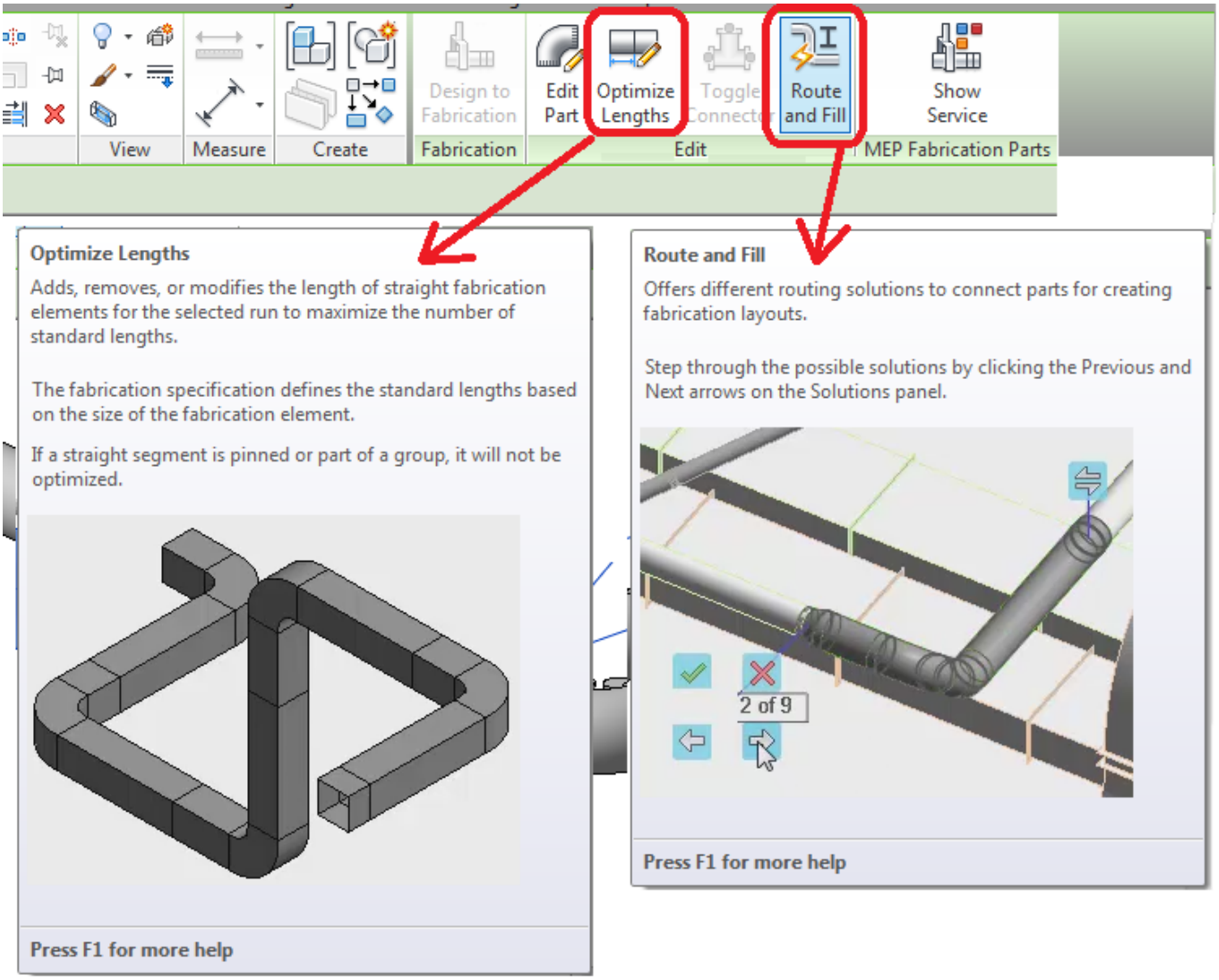

Fabrication Routing

As you place fabrication parts you are presented many options.

Rotate Part

Toggle Connector

Insert Part

Connect as Tap

Spacebar – Will rotate the part

Up arrow - Will toggle the connector

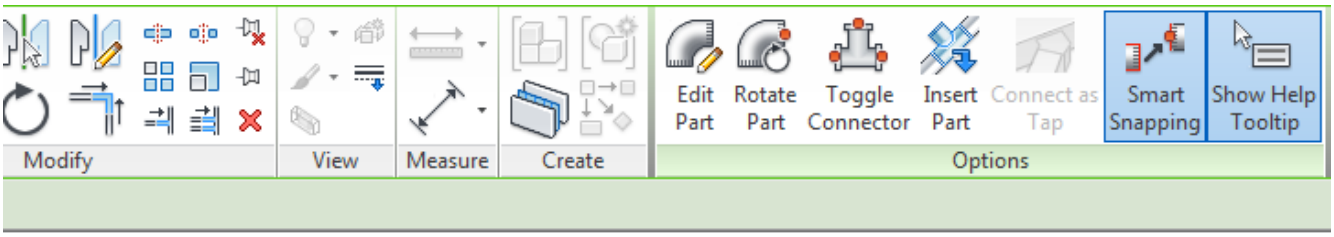

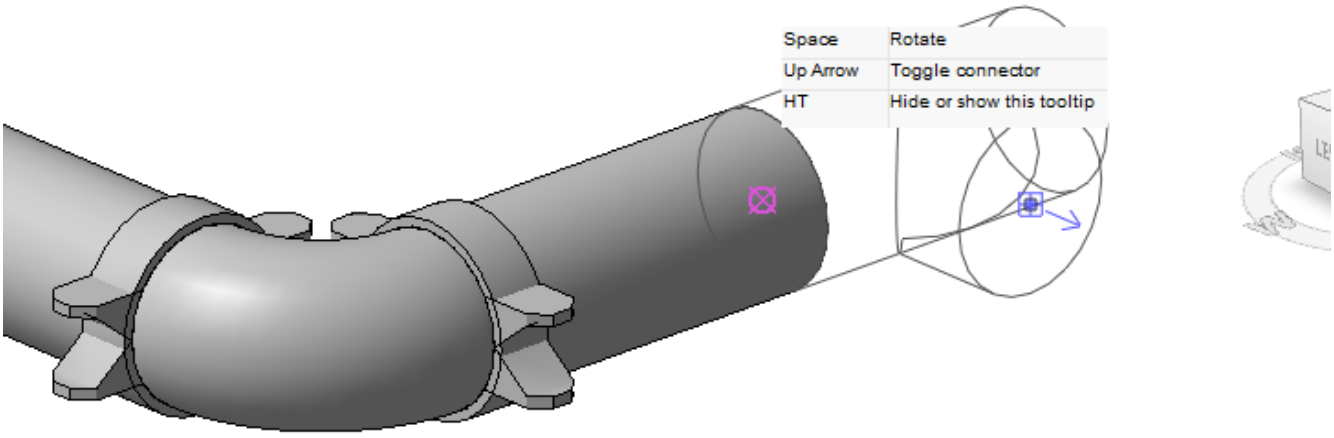

Creating Assemblies (Spools)

Select the group of components to become the new Assembly. Click the Create Assembly button.

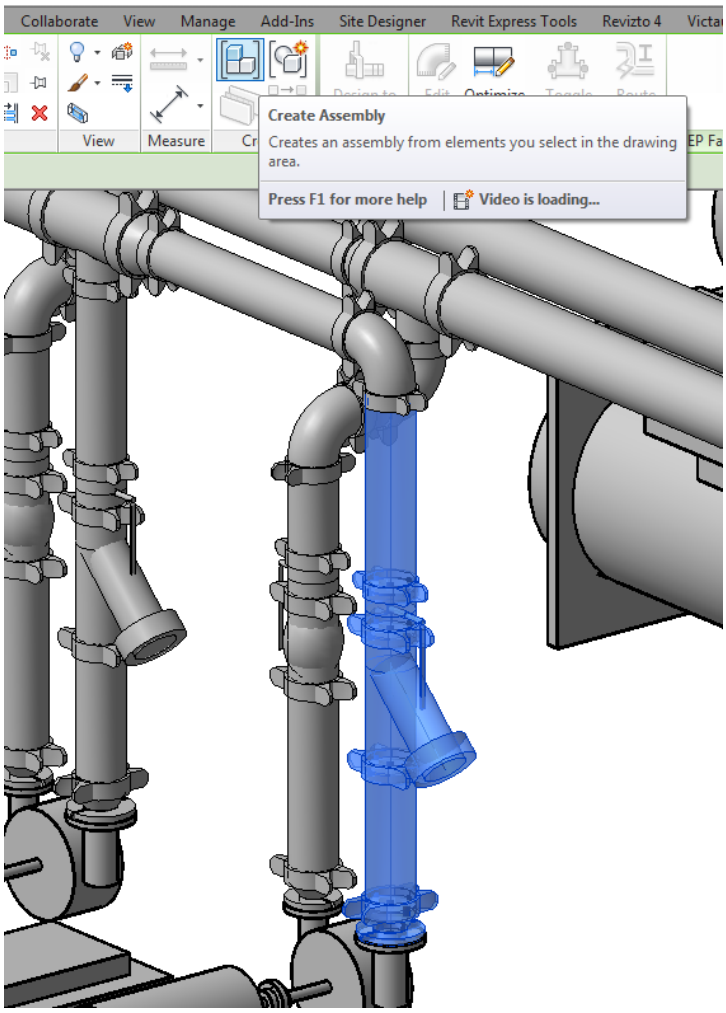

Define the spool name and sequential number.

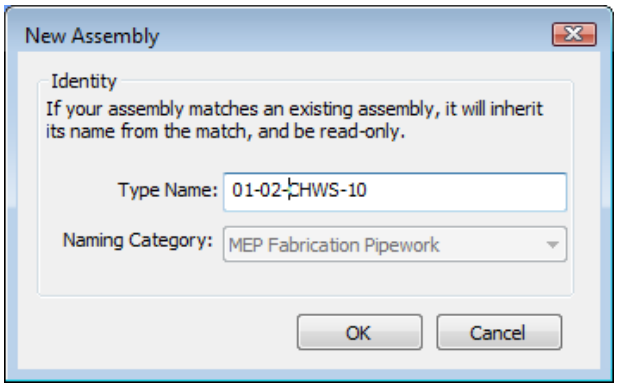

In the bottom of the Project Browser you will see the new Assembly appear.

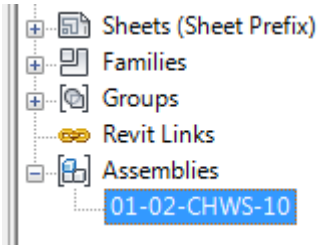

Right click on the assembly in the project browser and select Create Assembly Views.

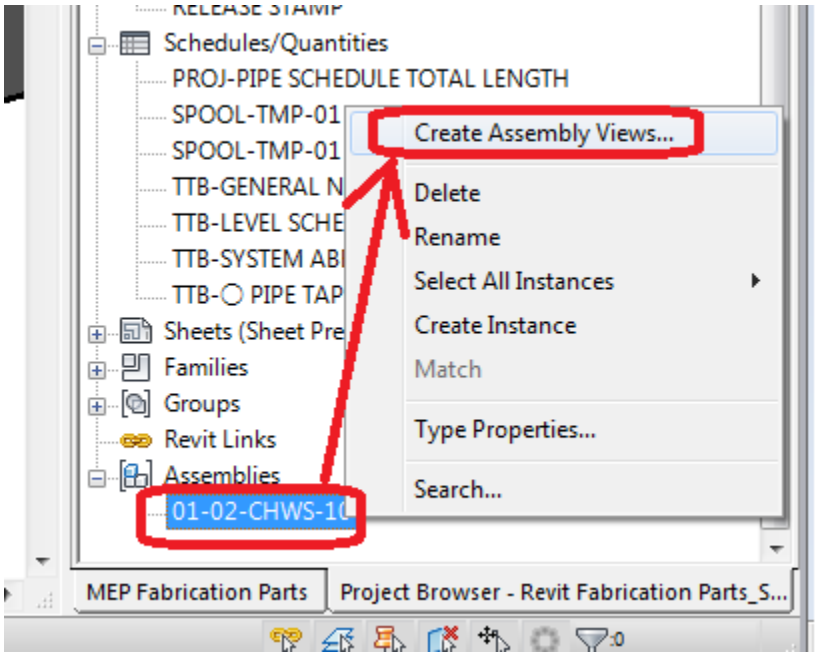

Create the Assembly Views – be sure to select the correct View Templates.

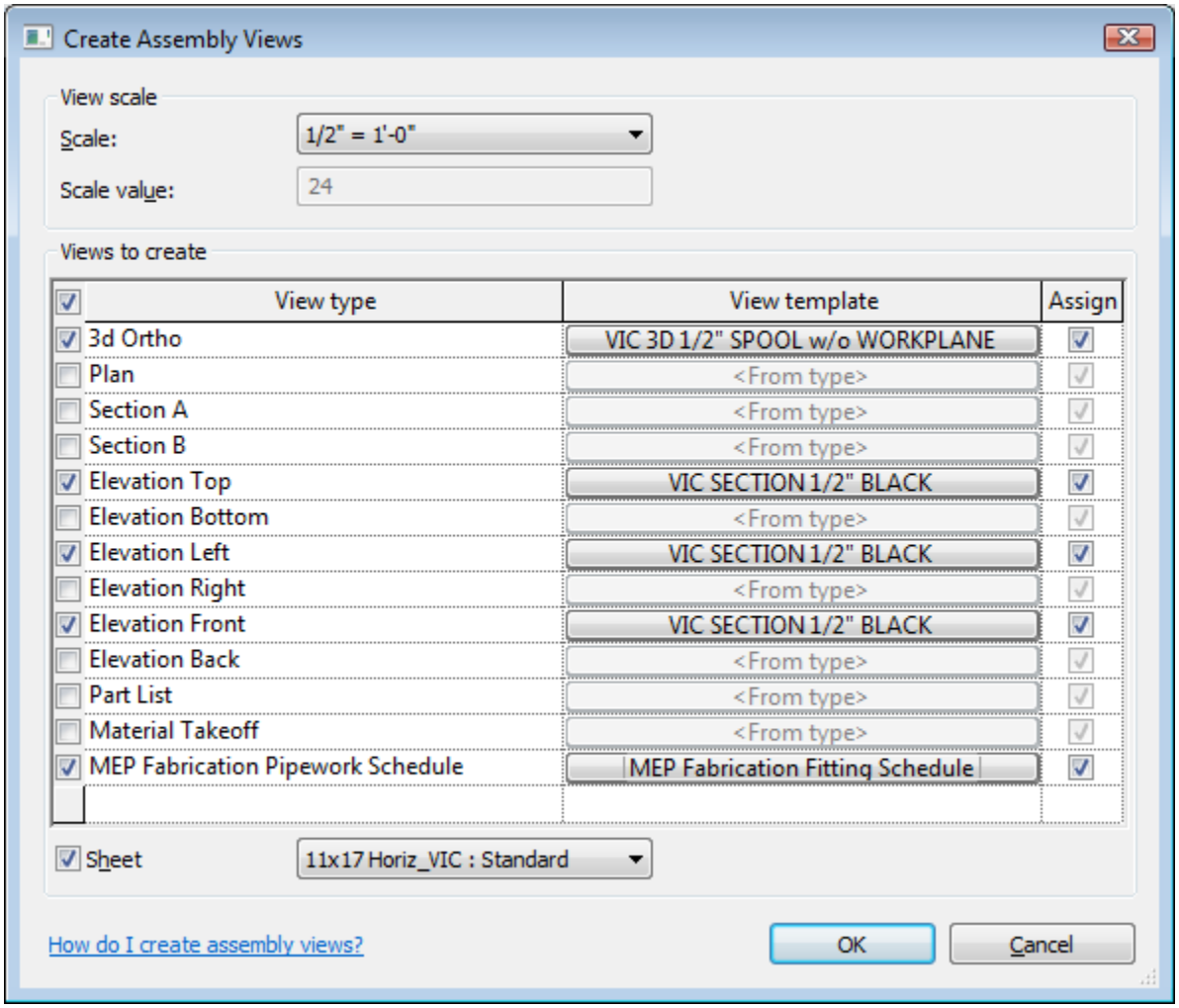

After clicking OK you will see the views and sheet appear in the project browser.

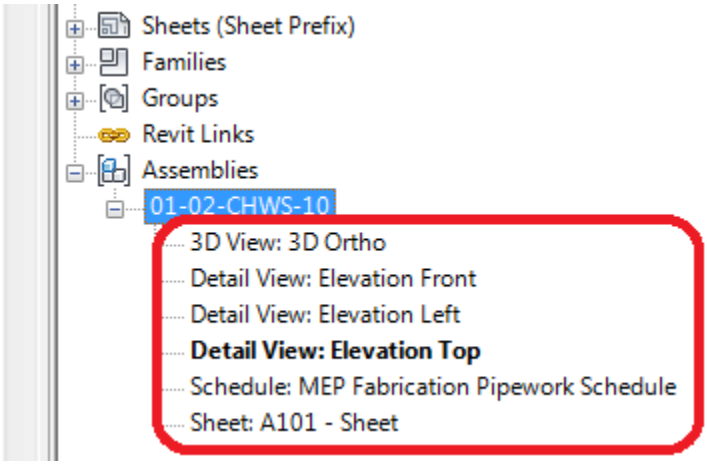

Open the Sheet and Drag and drop the views on the sheet. You will see that even the schedule is using a view template to assure the correct display of your views.

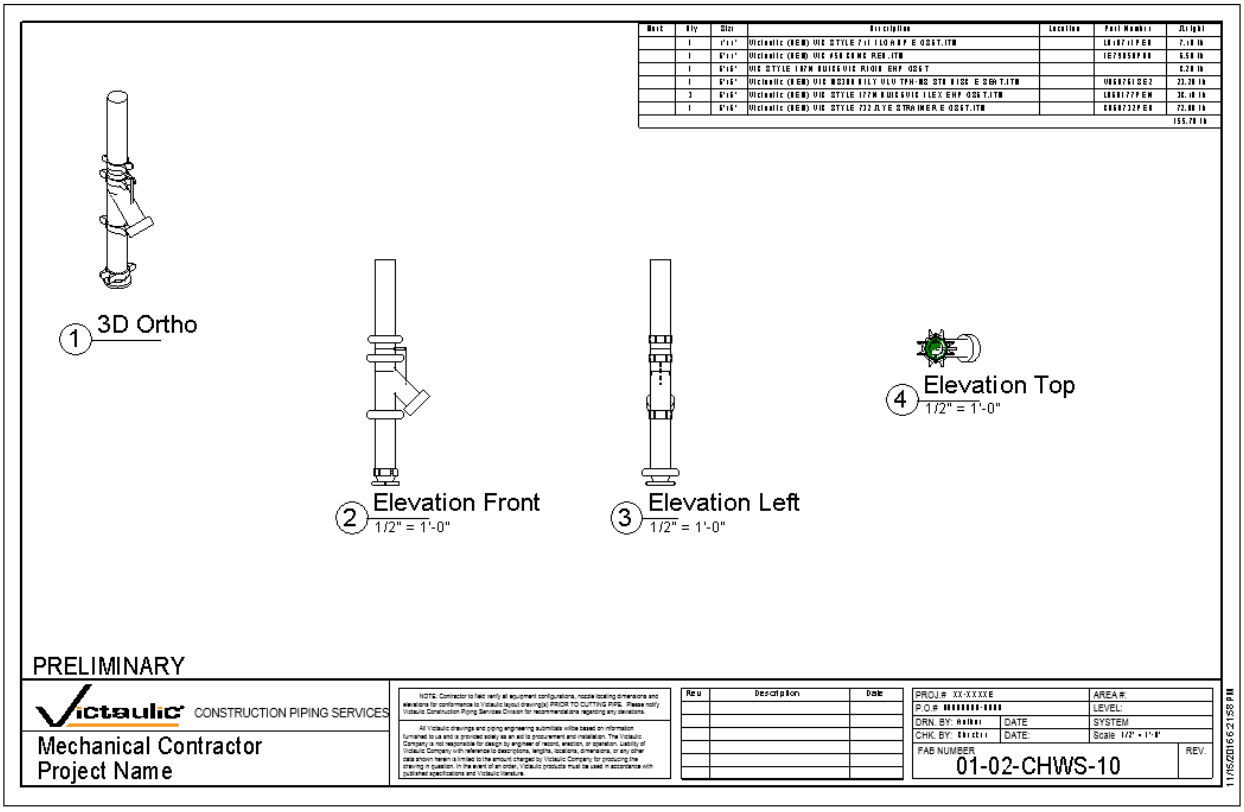

Now we are going to use Victaulic Tools for Revit
www.VictaulicSoftware.com

Click the Settings button under Create Assembly

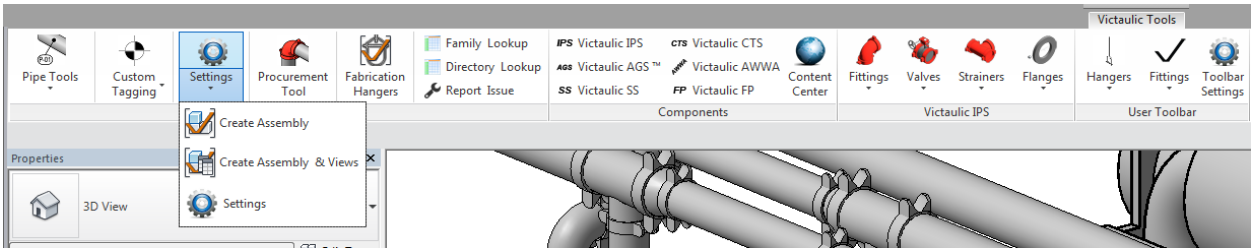

For ease of setup we are going to import the settings from the text file provided.

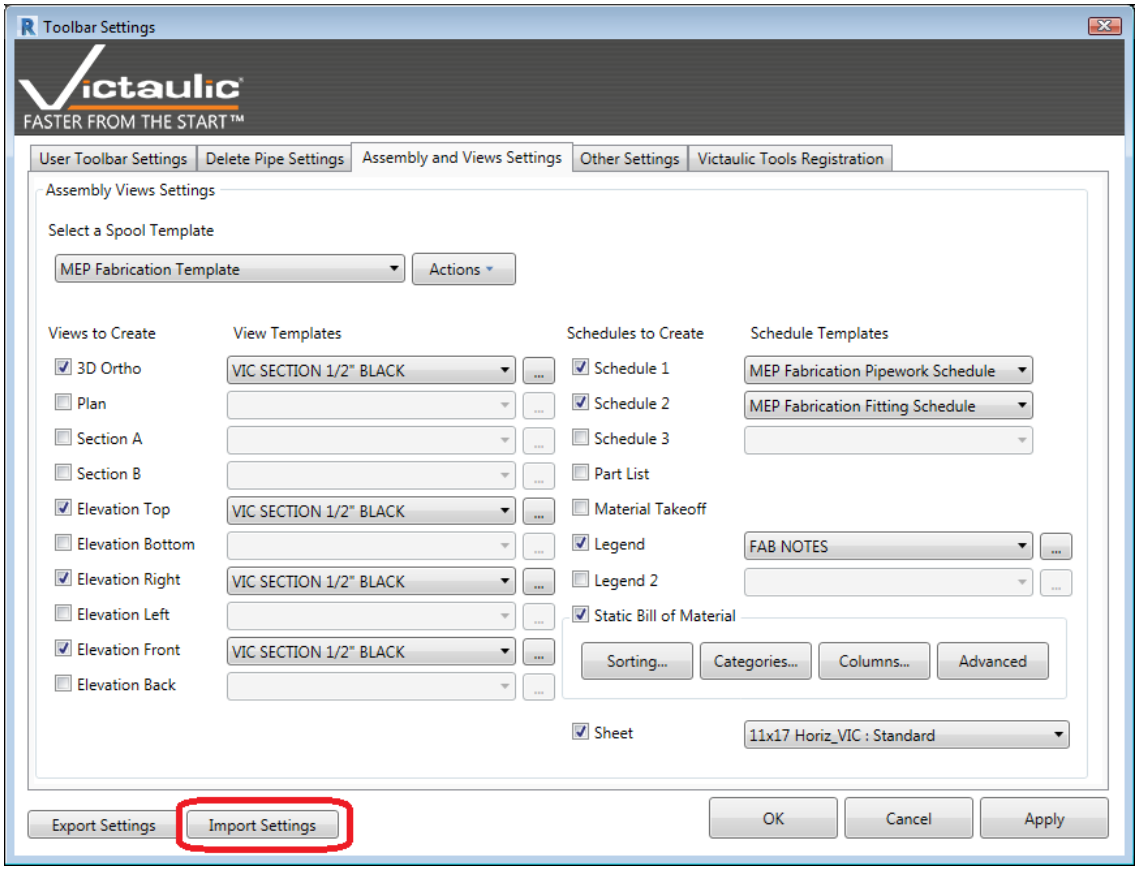

Now click the “Create Assembly and Views” button after selecting the items you want on the assembly.

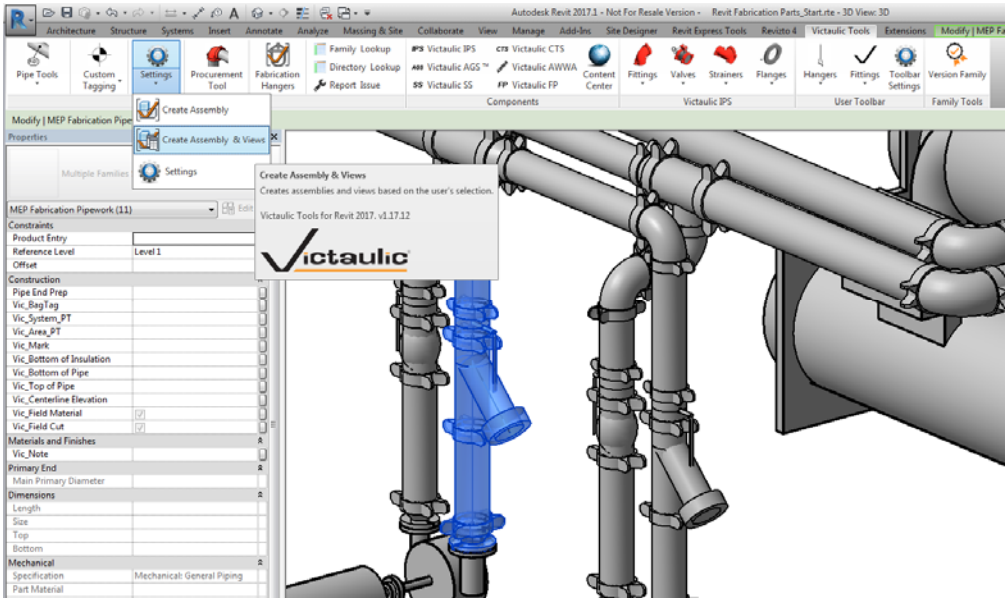

Select the “MEP Fabrication Template” and click Ok.

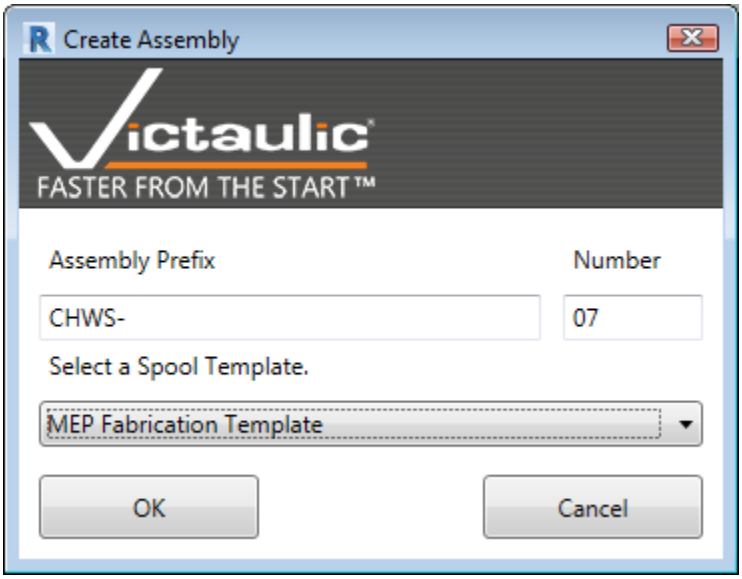

The assembly is created, views are placed on the sheet, and tags are placed and auto sequenced. View location is also set based on your settings.

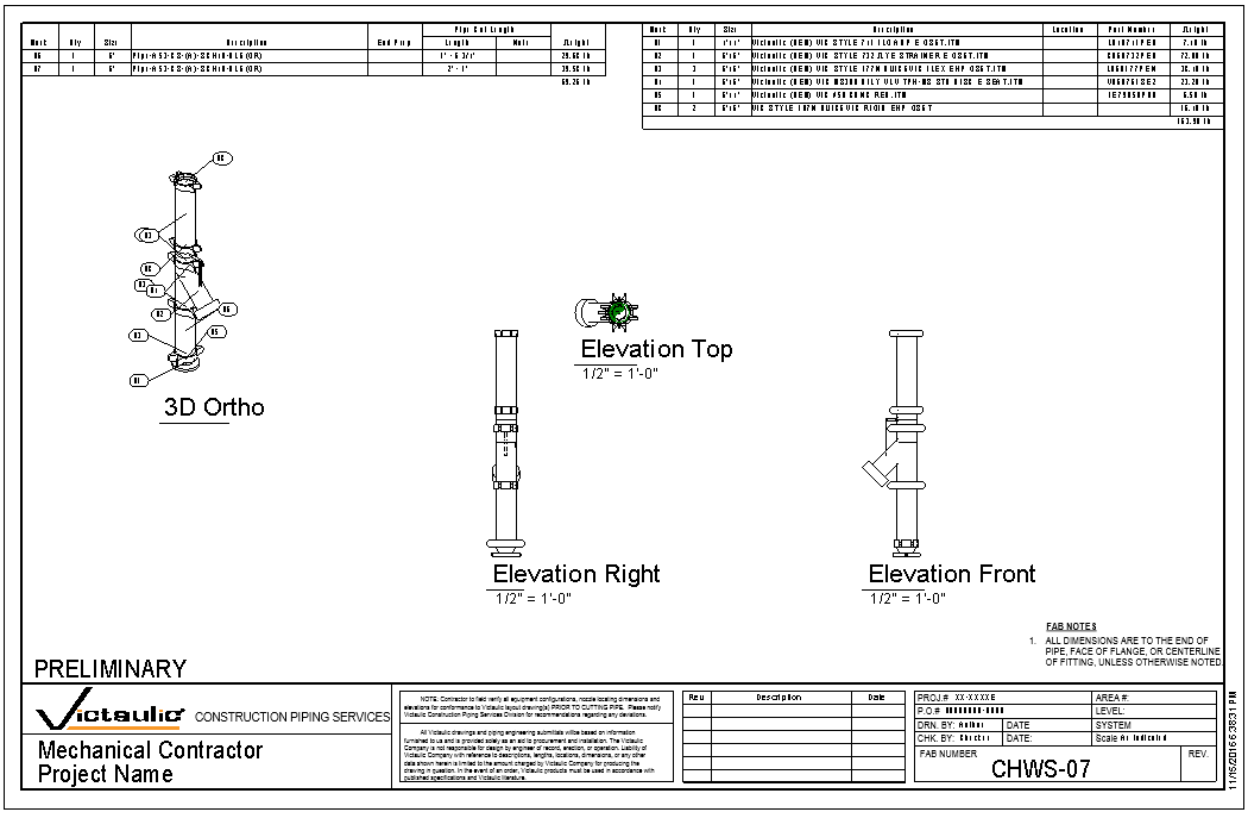

Fabrication Parts

Fabrication Parts (Updates)

- Added model categories Revit 2017
    - MEP Fabrication Containment, Ductwork, Hangers, Pipework
- Ability to resize routing Revit 2017.1
- Ability to swap fittings – Revit 2017 and better for 2017.1
- Added trim/extend editing – Revit 2017
- Added hidden lines – Revit 2016 R2
- Awesome Tagging for - Revit 2017 (Elevation at location)
- Improved AutoCAD Exports - Revit 2016 R2
- Route and Fill auto routing – Revit 2017
- Automatic cut in of tees, valves, or taps – Revit 2016 R2
- Slope routing improvements – Revit 2017

Fabrication Parts (plus)

- Database controls content – all content consistence with patterns supplied by Autodesk
- Pricing, labor, and part number data available
- Dimensionally accurate
- One source of content for both CADmep and Revit
- Large Database of Manufactures content
- Autodesk commitment of development