Fusion 360 strategies for bridging Between digital and physical models

Alex Lobos
Rochester Institute of Technology
@LobosDesign

AUTODESK

Class summary

This class shows the use of Autodesk's Fusion 360 and Memento for easily moving between physical and CAD models.

Digital models created in Fusion 360 can be 3D printed and refined with analog modelmaking techniques. The updated models can be brought back to the computer with image-capture software such as Memento, where they can be further refined.

Key learning objectives

At the end of this class, you will be able to:

- Learn how to use Fusion 360 for early concept development and well as for design definition.
- Learn how to combine tools in the A360 and 123D product families, taking advantage of their intuitive and effective workflows.
- Learn how to quickly move from conceptualization to testing and refinement by using CAD, model making, 3D printing, and 3D scanning.
- Learn powerful tools in Fusion 360, including Edit Form, Import Mesh, Pull, and Crease.

The gap between physical & virtual

Despite all the benefits that CAD offers, a major concern is bypassing physical exploration of design concepts and jumping directly from sketches into digital models and prototypes.

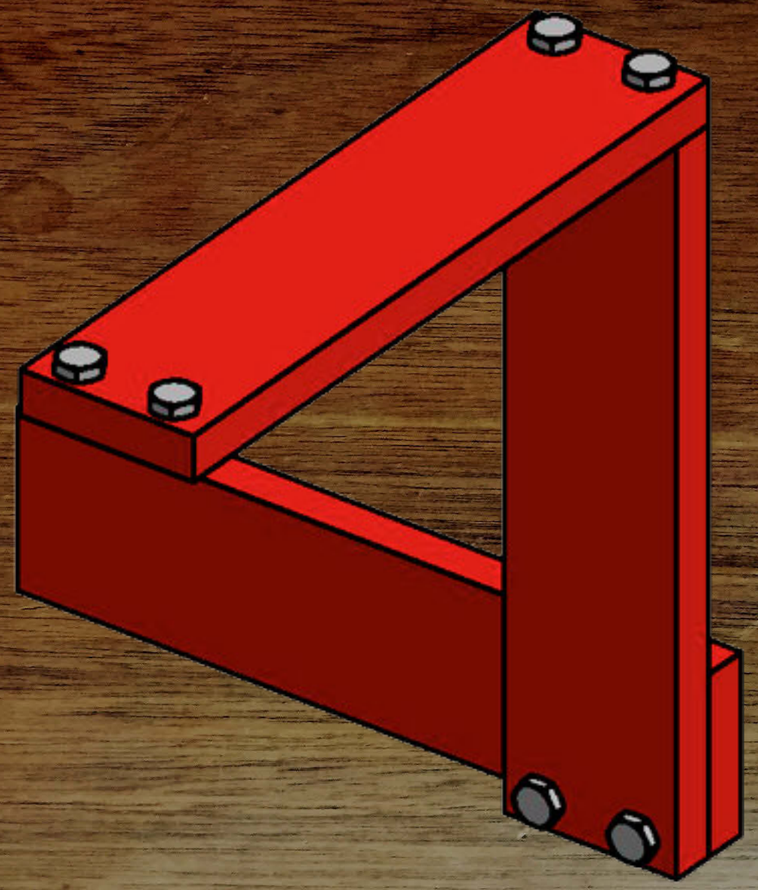

Grabcad.com

The gap between physical & virtual

Novice CAD users tend to let the software drive key design decisions and make various compromises along the way, accepting whatever shapes are generated.

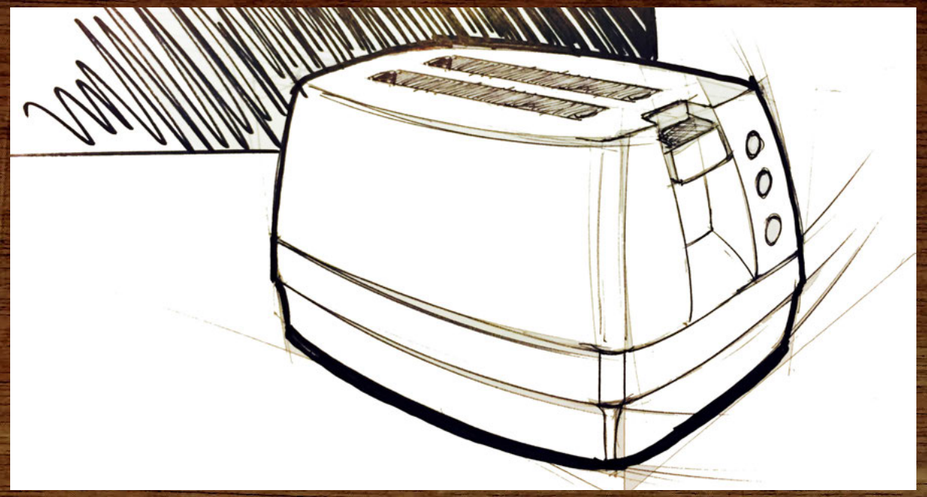

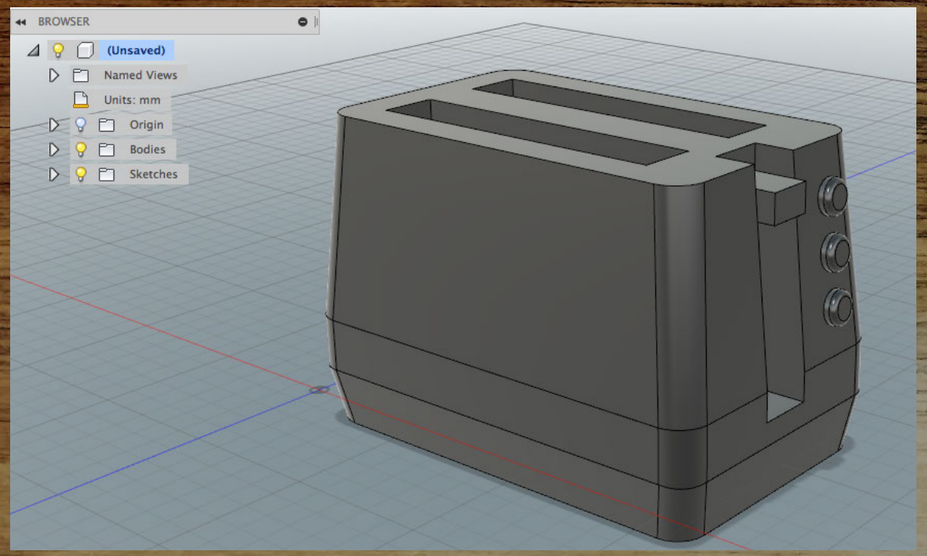

The gap between physical & virtual

Referencing physical geometry into CAD can be challenging. Images used as background canvas provide limited visual reference.

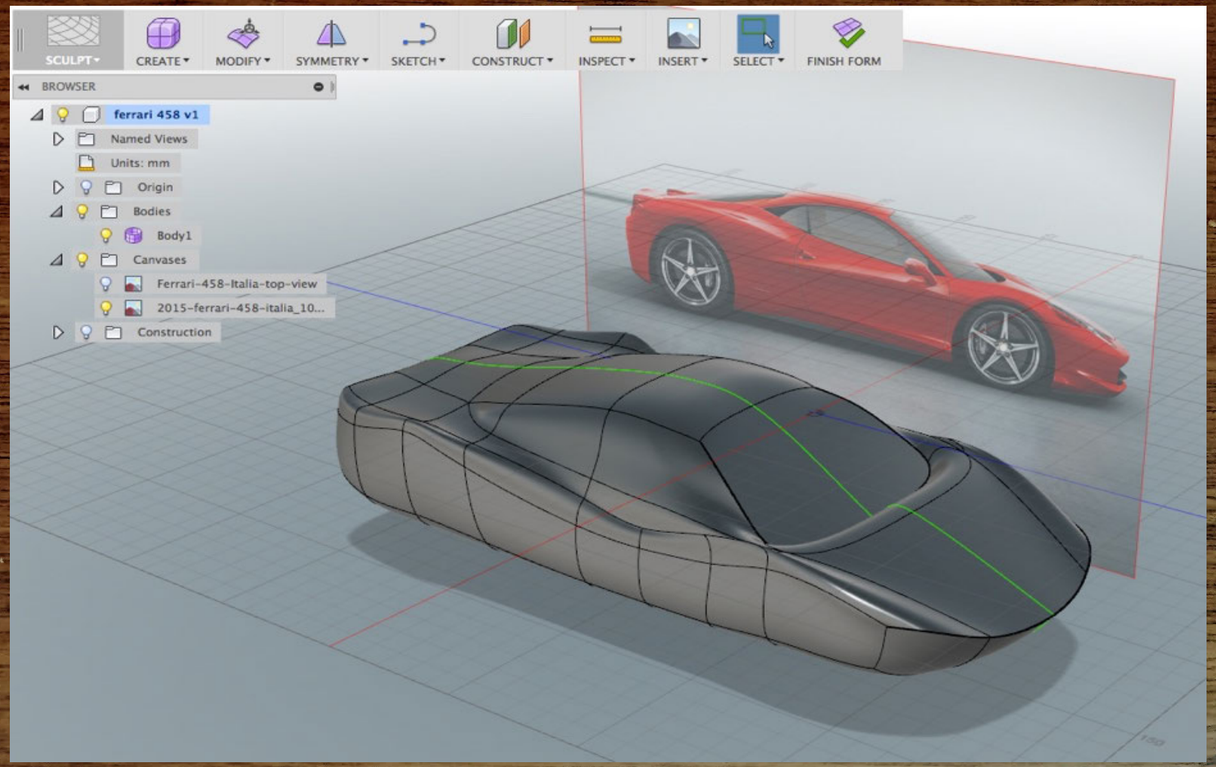

Jumping between physical and digital models

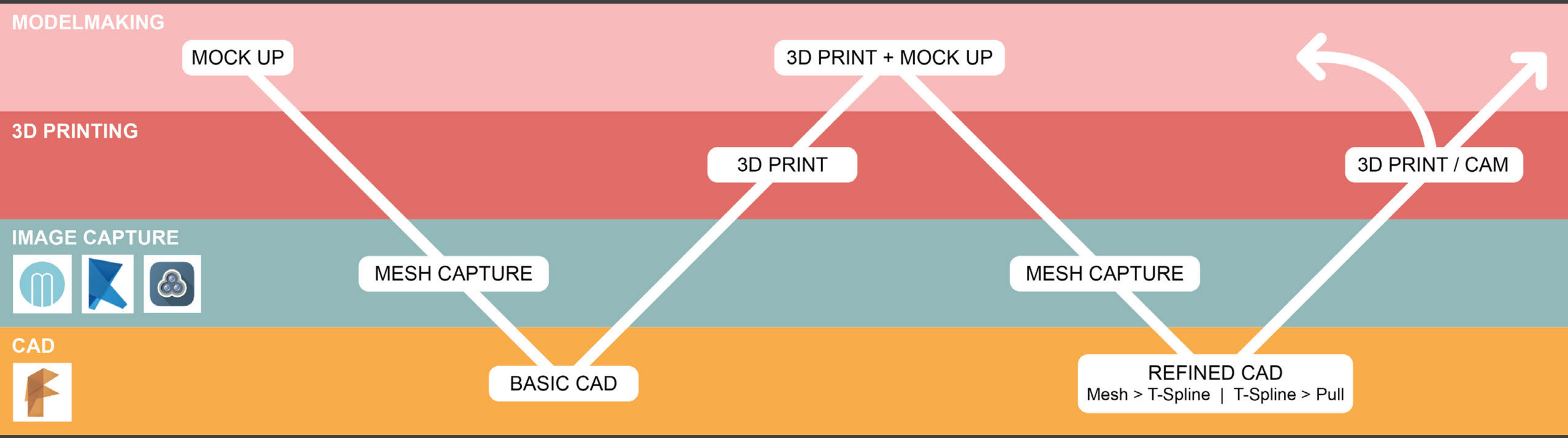

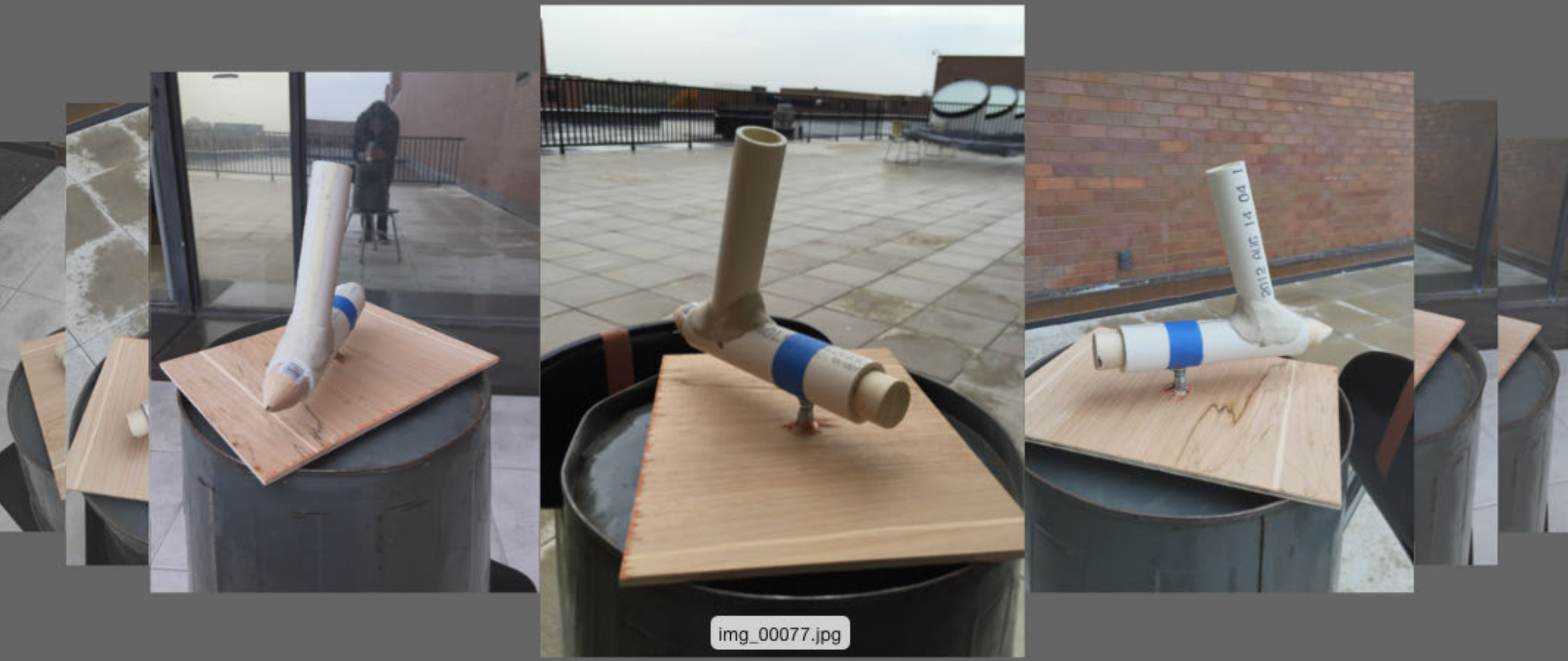
img_00077.jpg

AUTODESK® MEMENTO

AUTODESK® RECAP

AUTODESK®
123D® CATCH

AUTODESK® MEMENTO

AUTODESK®
FUSION 360

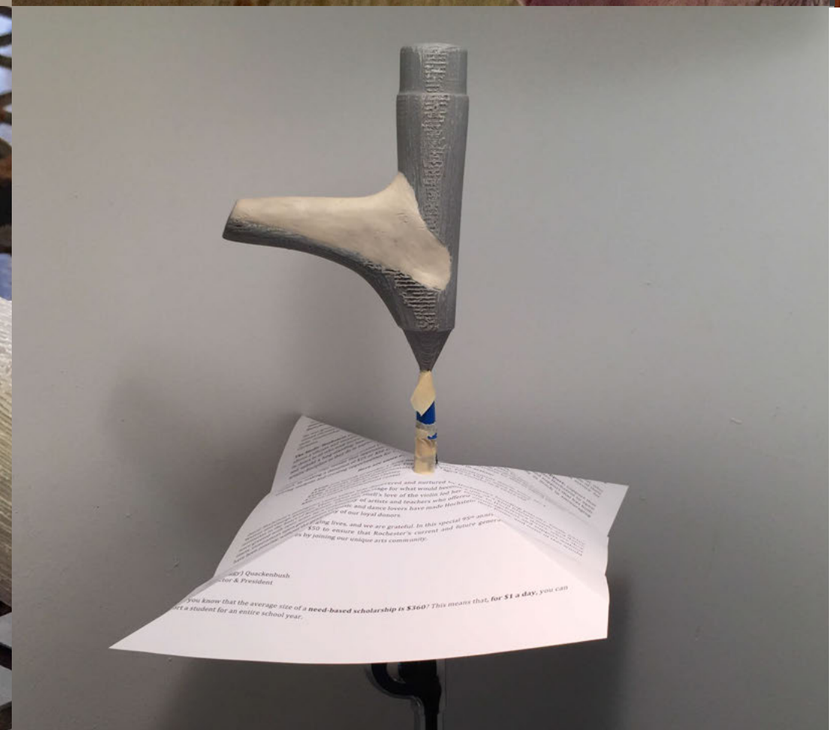
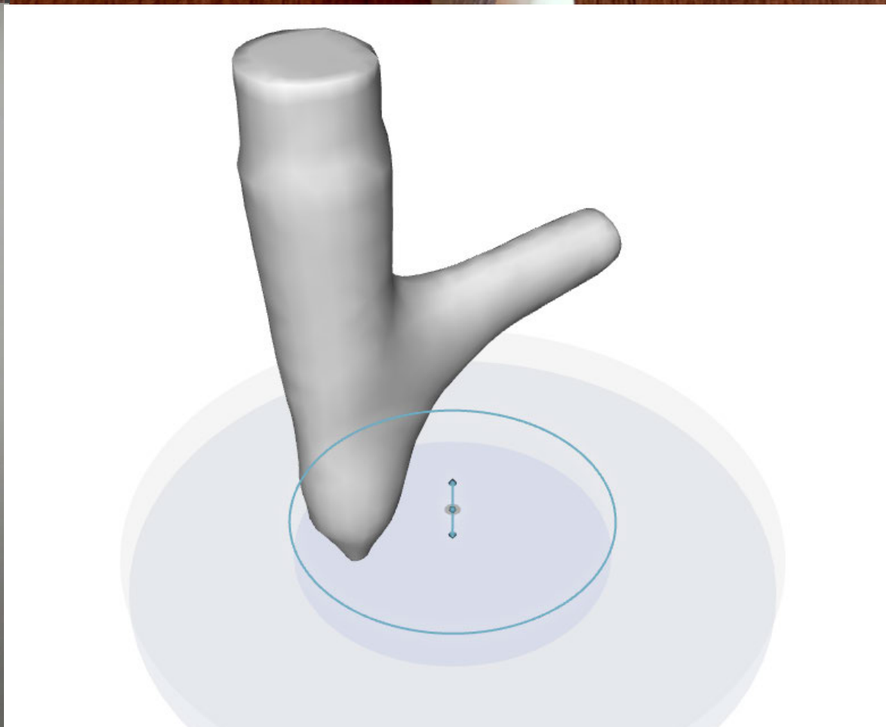

Key benefits of this workflow

It’s easy to transfer physical data to CAD by using photos and cloud-based image-capture software.

Key benefits of this workflow

It’s easy to transfer physical to CAD date digital using photos and cloud-based image capture software.

Mesh models can be imported into CAD as static models or they can be converted to T-Splines, which makes them fully editable.

Mockup

Image capture

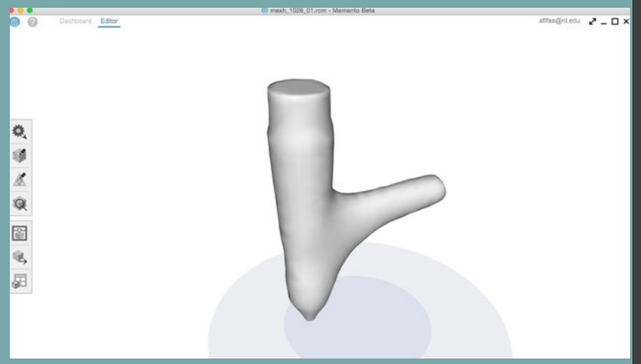

CAD

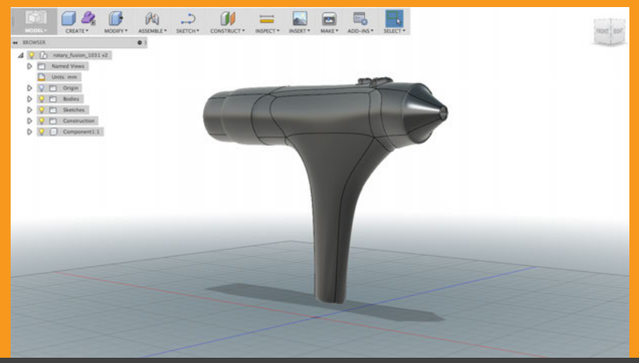

3D print

Key benefits of this workflow

It’s easy to transfer physical to CAD date digital using photos and cloud-based image capture software.

Mesh models can be imported into CAD as static models or they can be converted to T-Splines, which makes them fully editable.

Design intent can be maintained accurately between physical and digital environments. No more issues of design features getting “lost in translation”.

Handle from mesh + Shell from T-Spline = Integrated model

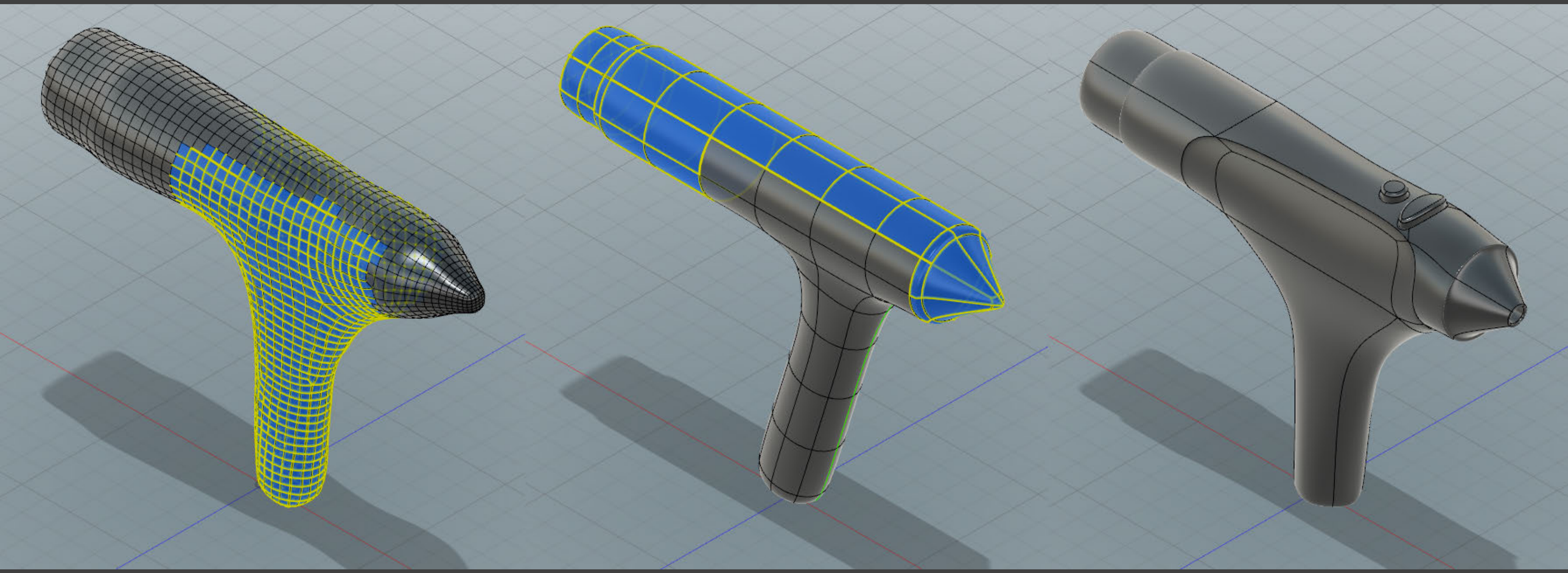

Let’s hear it!

Relive the memories… the excitement…

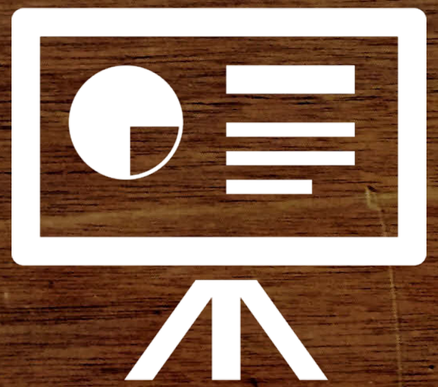

Fusion 360 strategies for bridging Between digital and physical models

Alex.Lobos@rit.edu
@LobosDesign

AUTODESK®

Autodesk is a registered trademark of Autodesk, Inc., and/or its subsidiaries and/or affiliates in the USA and/or other countries. All other brand names, product names, or trademarks belong to their respective holders. Autodesk reserves the right to alter product and services offerings, and specifications and pricing at any time without notice, and is not responsible for typographical or graphical errors that may appear in this document. © 2015 Autodesk, Inc. All rights reserved.